FINANCIAL ASSISTANCE
FUNDING OPPORTUNITY ANNOUNCEMENT

U. S. Department of Energy

Idaho Operations Office

Fiscal Year 2017 Consolidated Innovative Nuclear Research

Funding Opportunity Announcement:
DE-FOA-0001515

Announcement Type: Initial: 8/10/2016
AMENDMENT 0001 (8/18/2016)
AMENDMENT 0002 (11/3/2016)
AMENDMENT 0003 (11/30/2016)
AMENDMENT 0004 (1/23/2017)

CFDA Number: 81.121

Informational Webinar: August 8–10, 2016
(Video links and presentations will be made available at www.neup.gov)

Issue Date: August 10, 2016

Letter of Intent (Mandatory only for NSUF Applications)
Due Date: August 29, 2016 at 8:00 p.m. ET

R&D/NSUF Pre-Applications (Mandatory except for IRPs)
Due Date: September 14, 2016 at 8:00 p.m. ET

IRP Applications
Due Date: February 15, 2017 at 8:00 p.m. ET

Full R&D/NSUF Applications
Due Date: February 15, 2017 at 8:00 p.m. ET

AMENDMENT-0001: The purpose of this amendment is to update the IRP application due date to February 15, 2017. This modification also changes expected funding levels for IRPs to $18 million. In addition, several minor wording changes were made to the NSUF-1.3 and IRP-EM workscopes. Finally, language was added to page 5 of the FOA to describe the collaborative effort with the U.K. through the EPSRC which includes the following language:

The RCUK Energy Program, led by the Engineering and Physical Science Research Council (EPSRC) in the UK has announced a UK funding opportunity for certain workscopes in Appendix A. The UK funding opportunity will support UK researchers in US/UK collaborations in the following areas:

- *Radioisotope Retention in Graphite and Graphitic Materials (RC-2)*
- *Materials Ageing and Degradation (RC-7)*
- *Reactor Safety Technologies (RC-9)*
- *Materials Recovery (FC-1.2)*
- *Advanced Waste forms (FC-1.3) including; Waste forms development Thermodynamics of waste glasses and melts (FC-1.3a), Fuel Processing Off-Gas Management- Tritium separations technology (FC-1.3b), Fuel processing Off-Gas management- Rb interaction with container materials (FC-1.3c).*
- *Advanced Fuels (FC-2) including; Reactor pool side non-destructive characterization techniques for advanced fuel concepts (FC-2.1) and Extreme performance metal alloy cladding for fast reactors (FC-2.2), critical heat flux for accident tolerant fuels (FC-2.3).*
- *Used Nuclear fuel disposition: Disposal (FC-4).*
- *Nuclear Energy Advanced modeling and simulation (NEAMS-1) including only; NEAMS 1.1 (Atomistic and mesoscale modelling and simulation of nuclear fuels, cladding and reactor structural materials), NEAMS 1.2 (Macroscale fuel performance), NEAMS 1.4 (Thermal Hydraulics) and NEAMS 1.5 (Structural Mechanics).*

AMENDMENT-0002: The purpose of this amendment is to update IRP language to include other types of federal government funded laboratories and update IRP contact information. There are also small modifications to the NSUF workflow chart in Appendix E and reference corrections to the application restrictions section in Part III. Section A.

AMENDMENT-0003: The purpose of this amendment is to update the IRP-NE-1: Grand Challenge Problem for Nuclear Energy workscope. The workscope now has full details on the technical scope and includes the following language:

IRP-NE-1: Grand Challenge Problem for Nuclear Energy
Federal POC – Bhupinder Singh Technical POC – Roald Wigeland
(Up to 3 years and $3,000,000 total U.S. project cost)

Background*: The United States is a member of the Nuclear Energy Agency of the Organisation for Economic Co-operation and Development (OECD/NEA). The Office of Nuclear Energy within the Department of Energy is actively engaged with NEA in many areas relevant to our respective missions. NEA member countries are, collectively, world leaders in the use of nuclear technology and materials for*

a wide range of industrial, scientific, medical and energy purposes. The future use of such technologies appears to be increasing globally and there is a strong need to ensure that countries have the scientists and engineers needed to support their continued safe use. Spurring new specialists to become engaged in the nuclear technology field and to bring their creativity to innovate and expand the boundaries of our current knowledge is a key interest for many NEA countries. In partnership with its membership, the NEA is developing the concept of the NEA Education, Skills and Technology (NEST) Framework, which is aimed at addressing important issues in the areas of nuclear skills capability building, knowledge transfer and technical innovation within an international context. Under the NEST Framework, interested countries would support multinational projects that involve university students, professors and young professionals at research institutions. Further details of the implementation of the NEST Framework are being developed by a team of NEA member country experts as a cross-cutting NEA activity. This IRP is motivated by and supports the NEA effort and is intended to serve as a prototype for a potential larger effort to be undertaken through the NEST Framework.

IRP Goal and Objectives:

The Goal of this IRP is to solve a significant problem which presents a grand challenge to expanded use of nuclear energy worldwide. The main objective of the IRP is to support education, development and training in multiple technical disciplines associated with the use of nuclear energy by supporting approximately 10 students and 1 faculty member in the United States.

IRP Scope:

Applicants must address all of the elements listed below to be considered responsive to this IRP request for proposals:

1) *Define a problem which presents a grand challenge to expanded use of nuclear energy worldwide. Examples of such problems are provided below:*

    a. *How can an existing Pressurized Water Reactor (1GWe or more) be modified/redesigned to be more accident tolerant? Accident tolerant is intended to mean, elimination of the need for operator intervention and/or off-site emergency response for at least 72 hours without significant core damage. These modifications could include a total redesign of the reactor internals, and could include replacement of the reactor pressure head without replacing the reactor pressure vessel itself. The modified design should provide at least an additional 40 years of reactor life.*

    b. *How can in-situ real-time measurements be made to accurately determine the environment in the core of a test reactor, e.g., spatially resolved thermal conductivity measurement, porosity redistribution and swelling in fuel, temperature profile of fuel pellets, chemical redistribution in fuel, neutron flux, etc.?*
    c. *How can the reactor vessel of an existing nuclear power plant be modified or replaced to dramatically extend the life of the plant and to make it more accident tolerant?*
    d. *How can the construction and operating costs of a sodium-cooled fast reactor system be reduced while maintaining or enhancing the safety of the power plant, e.g., by dramatically simplifying the design, improving performance, or by using advanced materials, such that reactor system is at least cost competitive with currently available light water reactors, although it would be desirable to be even less expensive, on a per kW-hr basis?*

The applicant can choose any of the above problems or define one on their own; however, the applicant must elaborate on their understanding of the problem and how it meets the goal and objective of this request for proposals.

2) *This IRP imposes International Collaboration Requirements which are in addition to those specified elsewhere in the FY 2017 Consolidated Innovative Nuclear Research Funding Opportunity Announcement (FOA).*

    a. *The project team must include one international educational institution each from at least one and no more than two countries who are members of the OECD/NEA. The total number of students and faculty supported in each of the collaborating countries must be at least equal to those supported in the United States. The lead Principal Investigator must be from a United States educational institution and scope of work for each collaborating institution must be clearly defined.*
    b. *International participants must provide proof of equal faculty and student support for their work, should the project be selected.*
    c. *All U.S. funds provided under this award must be used to support the efforts of the educational institutions and their non-university partners in the United States.*

3) *The Applicant must describe how any intellectual property generated under the project will be handled.*

4) *Project Deliverables:*

The list of proposed project deliverables must include:

    a. *A detailed project schedule.*
    b. *If a software is developed as part of the project, a verification and validation plan for each software.*
    c. *A final project report which includes (i) A statement of the problem and a description of the solution; (ii) The extent to which the problem was solved and remaining or follow-on work needed; (iii) A description of the extent to which the project was successful in supporting education, development and training in multiple technical disciplines associated with the use of nuclear energy; and (iv) Lessons learned and suggestions that can be used by DOE-NE as well as NEA in future work.*

AMENDMENT-0004: In the IRP-NE-1 workscope, the phrase, "…each of" in section 2, part A has been removed. With this amendment, the requirement to match the number of students and faculty has been relaxed such that in total the number of students and faculty supported in the collaborating countries must be at least equal to those supported in the United States.

TABLE OF CONTENTS

LIST OF ACRONYMS vi

PART I – FUNDING OPPORTUNITY DESCRIPTIONS 1

A. STATEMENT OF OBJECTIVES 1
- A.1 Background and Objectives 1
- A.2 Major NE Funded Research Programs 2
  - A.2.1 Fuel Cycle Research and Development (FC R&D) Program 2
  - A.2.2 Reactor Concepts Research, Development and Demonstration (RC RD&D) Program 2
  - A.2.3 Nuclear Energy Advanced Modeling and Simulation (NEAMS) Program 3
  - A.2.4 Nuclear Energy Enabling Technologies (NEET) Crosscutting Technology Development (CTD) 3
  - A.2.5 Nuclear Science User Facilities (NSUF) 3
  - A.2.6 NSUF Fuels and Materials Library 4

B. FUNDING OPPORTUNITIES 4
- B.1 U.S. University-led PS/MS R&D Projects 5
- B.2 U.S. University-, National Laboratory-, or Industry-led PS R&D Projects 5
  - B.2.1 Note for Nuclear Science User Facilities Access Projects 6
- B.3 U.S. University-led IRP Projects 7

PART II – AWARD INFORMATION 9

A. TYPE OF AWARD INSTRUMENT 9

B. ESTIMATED FUNDING 9
- B.1 U.S. University-led PS/MS R&D Projects 9
- B.2 U.S. University-, National Laboratory-, or Industry-led PS R&D Projects 9
  - B.2.1 Nuclear Science User Facilities Projects 9
- B.3 U.S. University-led PD IRP Projects 9

C. MAXIMUM AND MINIMUM AWARD SIZE 9
- C.1 U.S. University-led PS/MS R&D Projects 9
- C.2 U.S. University-, National Laboratory-, or Industry-led PS R&D Projects 9
  - C.2.1 Nuclear Science User Facilities Projects 10
- C.3 U.S. University-led IRP Projects 10

D. EXPECTED NUMBER OF AWARDS 10
- D.1 U.S. University-led PS/MS R&D Projects 10
- D.2 U.S. University-, National Laboratory-, or Industry-led PS R&D Projects 10
  - D.2.1 Nuclear Science User Facilities Projects 10
- D.3 U.S. University-led PD IRP Projects 10

E. ANTICIPATED AWARD SIZE 10
- E.1 U.S. University-led PS/MS R&D Projects 10
- E.2 U.S. University-, National Laboratory-, or Industry-led PS R&D Projects 10

E.2.1 Nuclear Science User Facilities Projects 11
E.3 U.S. University-led PD IRP Projects 11
F. PERIOD OF PERFORMANCE 11
G. TYPE OF APPLICATION 11
PART III – ELIGIBILITY INFORMATION 12
A. ELIGIBLE APPLICANTS 12
B. COST SHARING 14
C. OTHER ELIGIBILITY REQUIREMENTS 14
C.1 FFRDC Contractors 14
PART IV – APPLICATION AND SUBMISSION INFORMATION 17
A. ADDRESS TO REQUEST APPLICATION PACKAGE 17
B. DOCUMENT FORMAT REQUIREMENTS 17
C. LETTER OF INTENT AND PRE-APPLICATION 17
C.1 NSUF Letter of Intent (LOI) 17
C.1.1 User Agreement Terms & Conditions Checkbox (Required for all Applicants) 18
C.1.2 LOI Submittal Instructions 18
C.2 R&D/NSUF Pre-applications 18
C.2.1 Pre-application Narrative 19
C.2.2 Benefit of Collaboration 19
C.2.3 Principal Investigator Vitae 19
C.2.4 Agreement Requirements 20
D. CONTENT AND FORM OF ALL FULL APPLICATIONS 20
D.1 Conflict-of-Interest (COI) Acknowledgement (Checkbox) 20
D.2 SF 424 (R&R) 20
D.3 Research and Related Other Project Information 21
D.4 Project Summary/Abstract 21
D.5 Project Narrative 21
D.6 Vitae (Technical Expertise and Qualifications) 23
D.7 Benefit of Collaboration 23
D.8 Capabilities 24
D.9 Letters of Support (IRPs only) 24
D.10 Budget Documents 24
D.10.1 SF424 Research and Related (R&R) Lead Budget Form 24
D.10.2 SF424 R&R Subaward Budget Form 25
D.10.3 Budget for DOE/NNSA Federally Funded Research and Development Center (FFRDC) Contractor 25
D.10.4 Budget Justification 25
D.11 Additional Attachments 26

D.11.1 Current and Pending Support 26
D.11.2 Coordination and Management Plan 26
D.11.3 Letter of Authorization for DOE/NNSA FFRDCs 26
D.11.4 Project/Performance Site Location(s) 27
D.11.5 Environmental Checklist 27
D.11.6 Certifications and Assurances 27

E. SUBMISSION FROM SUCCESSFUL APPLICANTS 29

F. SUBMISSION DATES AND TIMES 29
F.1 NSUF Letter of Intent Due Date 29
F.2 R&D/NSUF Pre-Application Due Date 29
F.3 Integrated Research Projects (IRP) Due Date 29
F.4 Full R&D/NSUF Application Due Date 29

G. INTERGOVERNMENTAL REVIEW 29

H. FUNDING RESTRICTIONS 30
H.1 Cost Principles 30
H.2 Pre-Award Costs 30

I. OTHER SUBMISSION AND REGISTRATION REQUIREMENTS 30
I.1 Where to Submit 30
I.2 Application Validity Timeframe 30

PART V – APPLICATION REVIEW INFORMATION 31

A. CRITERIA 31
A.1 Pre-application Review (PS, MS, and NSUF) 31
A.1.1 Relevancy Attributes 31
A.1.2 Program Priority 31
A.1.3 Merit Categories 32
A.2 Feasibility Review (NSUF Projects Only) 33
A.3 Initial Review Criteria of Full Application 33
A.4 PS/MS/NSUF R&D Merit Review Criteria: Full Applications 33
A.4.1 Program Relevancy/Priority Attributes 34
A.4.2 Technical Merit Attributes 34
A.5 Program Directed (IRP) Merit Review for Full Application 36
A.5.1 Relevancy Attributes 36
A.5.2 Technical Merit Attributes 36
A.6 Other Selection Factors 38

B. SUMMARY OF THE REVIEW AND SELECTION PROCESS 39
B.1 PS/MS/NSUF Pre-applications 39
B.2 PS/MS/NSUF Full Applications 39
B.3 IRP Full Applications 40
B.4 Selection Official Considerations 40

C. ANTICIPATED NOTICE OF SELECTION 40

PART VI – AWARD ADMINISTRATION INFORMATION 41

A. AWARD NOTICES 41
- A.1 Notice of Selection 41
- A.2 Nondisclosure and Confidentiality Agreements Representations 41
- A.3 Notice of Award 41

B. ADMINISTRATIVE AND NATIONAL POLICY REQUIREMENTS 41
- B.1 Administrative Requirements 41
  - B.1.1 DUNS and SAM Requirements 42
  - B.1.2 Subaward and Executive Reporting 42
- B.2 Special Terms and Conditions and National Policy Requirements 42
- B.3 Intellectual Property Provisions 44
- B.4 Lobby Restrictions 44
- B.5 Corporate Felony Conviction and Federal Tax Liability Representations 44
- B.6 Statement of Substantial Involvement 45

C. REPORTING 46

PART VII – QUESTIONS/AGENCY CONTACTS 47

A. QUESTIONS 47

B. AGENCY CONTACT 47

C. INFORMATIONAL WEBINAR 47

PART VIII – OTHER INFORMATION 48

A. MODIFICATIONS 48

B. GOVERNMENT RIGHT TO REJECT OR NEGOTIATE 48

C. COMMITMENT OF PUBLIC FUNDS 48

D. PROPRIETARY APPLICATION INFORMATION 48

E. EVALUATION AND ADMINISTRATION BY NON-FEDERAL PERSONNEL 49

F. INTELLECTUAL PROPERTY DEVELOPED UNDER THIS PROGRAM 49

G. NOTICE OF RIGHT TO REQUEST PATENT WAIVER 49

H. UNDERSTANDING COST SHARING REQUIREMENTS (not required for Universities and FFRDCs) 50

I. NOTICE REGARDING ELIGIBLE/INELIGIBLE ACTIVITIES 52

J. NO-COST TIME EXTENSIONS 52

K. CONFERENCE SPENDING 53

PART IX – APPENDICES/REFERENCE MATERIAL 54

Appendix A: Workscopes for U.S. University-led Program and/or Mission Supporting R&D Projects 55

Appendix B: Workscopes for U.S. University-, National Laboratory-, or Industry-led Program Supporting R&D Projects 78

Appendix C: Workscopes for U.S. University-led Program Directed Integrated Research Project (IRP) R&D 88

Appendix D: Data Needs for Validation 106

Appendix E: Accessing Nuclear Science User Facilities 112

Appendix F: Draft Nuclear Science User Facilities User Agreement 116

LIST OF ACRONYMS

CFDA	Catalog of Federal Domestic Assistance
CFA	Call for Full Applications
CFR	Code of Federal Regulations
CINR	Consolidated Innovative Nuclear Research
COI	Conflict of Interest
CTD	Crosscutting Technology Development
DE	Department of Energy (FOA Number)
DOE	Department of Energy
DUNS	Data Universal Numbering System
FC R&D	Fuel Cycle Research and Development
FFATA	Federal Funding and Transparency Act of 2006
FFRDC	Federally Funded Research and Development Center
FOA	Funding Opportunity Announcement
FSRS	FFATA Subaward Reporting System
FY	Fiscal Year
ID	Identification
IRP	Integrated Research Project
LOI	Letter of Intent
LWRS	Light Water Reactor Sustainability
M&O	Management and Operating
M&TE	Measuring and Test Equipment
MOOSE	Multiphysics Object Oriented Simulation Environment
MS	Mission Supporting
MSI	Minority Serving Institution
NE	Office of Nuclear Energy
NEAMS	Nuclear Energy Advanced Modeling and Simulation
NEET	Nuclear Energy Enabling Technologies
NEUP	Nuclear Energy University Program
NSUF	Nuclear Science User Facilities
NNSA	National Nuclear Security Administration
PD	Program Directed
PDF	Adobe Portable Document Format
PIE	Post-irradiation Examination

PI	Principal Investigator
POC	Point of Contact
PS	Program Supporting
QA	Quality Assurance
R&D	Research and Development
RC RD&D	Reactor Concepts Research, Development and Demonstration
RPA	Request for Pre-Applications
SAM	System for Award Management
SF	Standard Form
SMR	Small Modular Reactors
SOW	Statement of Work
U.S.	United States

PART I – FUNDING OPPORTUNITY DESCRIPTIONS

A. STATEMENT OF OBJECTIVES

This Funding Opportunity Announcement (FOA) is for Consolidated Innovative Nuclear Research (CINR) and is thus referred to in this document as the "CINR FOA".

A.1 Background and Objectives

The Department of Energy's (DOE) Office of Nuclear Energy (NE) conducts crosscutting nuclear energy research and development (R&D) and associated infrastructure support activities to develop innovative technologies that offer the promise of dramatically improved performance for advanced reactors and fuel cycle concepts while maximizing the impact of DOE resources.

This FOA also supports the DOE Gateway for Accelerated Innovation in Nuclear (GAIN) initiative (see https://gain.inl.gov) that was announced by the White House in November 2015, which provides the nuclear energy community with access to the technical, regulatory, and financial support necessary to move new or advanced nuclear reactor designs toward commercialization while ensuring the continued safe, reliable, and economic operation of the existing nuclear fleet. Since its inception, the GAIN team has been working closely with the advanced nuclear design community to identify R&D objectives that may be appropriately addressed through DOE programs. Recent technology specific workshops that were organized by GAIN, in coordination with EPRI and NEI, focused on Molten Salt, High Temperature Gas, and Fast Reactor technologies. Based on output from these workshops, multiple work scopes in the 2017 CINR FOA are focused on addressing R&D needs identified by developers in the technology areas. Several of the work scopes contain explicit language as guidance, but there are many additional work scopes that at least tangentially address needs identified in the recent technology specific workshops. Generally speaking, proposals that offer flexibility or provision for addressing measurements, materials, and conditions relevant to private sector developers of fast-spectrum reactors (Pb-cooled, sodium cooled, and gas cooled), molten salt reactors (MSR), or high-temperature gas-cooled reactors (HTGCR) are encouraged.

NE strives to promote integrated and collaborative research conducted by national laboratory, university, industry, and international partners under the direction of NE's programs, and to deploy innovative nuclear energy technologies to the market in order to meet the strategic goals and optimize the benefits of nuclear energy. NE funds research activities through both competitive and direct mechanisms, as required to best meet the needs of NE. This approach ensures a balanced R&D portfolio and encourages new nuclear power deployment with creative solutions to the universe of nuclear energy challenges. This FOA addresses the competitive portion of NE's R&D portfolio as executed through the Nuclear Energy University Program (NEUP), Nuclear Energy Enabling Technologies (NEET) Crosscutting Technology Development (CTD), and the Nuclear Science User Facilities (NSUF). NEUP utilizes up to 20% of funds appropriated to NE's R&D program for university-based infrastructure support and R&D in key NE program-related areas: Fuel Cycle Research and Development (FC R&D), Reactor Concepts Research, Development and Demonstration (RC RD&D), and Nuclear Energy Advanced Modeling and Simulation (NEAMS). NEET CTD supports national laboratory-, university- and industry-led crosscutting research. By establishing the NSUF in 2007, DOE-NE opened up the world of material test reactors, beam lines, and post-irradiation examination

facilities to researchers from U.S. universities, industry and national laboratories by granting no-cost access to world-class nuclear research facilities. In addition to the consolidation of the NSUF Call for Applications (CFA) for access to capabilities, NEUP or NEET CTD projects requiring irradiation testing and/or post-irradiation examination (PIE) may include no-cost access to NSUF capabilities through a single application response to this FOA.

NE reserves the right to respond to potential shifts in R&D priorities during Fiscal Year (FY) 2017 that may be driven by events, policy developments, or Congressional/budget direction. NE will factor such considerations into decisions related to the timing and scale of award announcements associated with this FOA. Further, NE reserves the right to fund all or part of an application to this FOA with programmatic funds.

A.2 Major NE Funded Research Programs

A.2.1 Fuel Cycle Research and Development (FC R&D) Program

The mission of the FC R&D program is to develop used nuclear fuel management strategies and technologies to support meeting the federal government responsibility to manage and dispose of the Nation's commercial used nuclear fuel and high-level waste and to develop sustainable fuel cycle technologies and options that improve resource utilization and energy generation, reduce waste generation, enhance safety, and limit proliferation risk.

The program vision is that by mid-century, strategies and technologies for the safe, long-term management and eventual disposal of U.S. commercial used nuclear fuel and any associated nuclear wastes have been fully implemented. Additionally, it is desired that advanced nuclear fuel and fuel cycle technologies that enhance the accident tolerance of light-water reactors and enable sustainable fuel cycles are demonstrated and deployed. Together, these technologies and solutions support the enhanced availability, affordability, safety, and security of nuclear-generated electricity in the United States.

Current challenges include the development of high burn-up fuel and cladding materials to withstand irradiation for longer periods of time with improved accident tolerance; development of simplified materials recovery technologies, waste management (including storage, transportation, and disposal), and proliferation risk reduction methods; and development of processes and tools to evaluate sustainable fuel cycle system options and to effectively communicate the results of the evaluation to stakeholders.

A.2.2 Reactor Concepts Research, Development and Demonstration (RC RD&D) Program

The mission of the RC RD&D program is to develop new and advanced reactor designs and technologies that broaden the applicability, improve the competitiveness, and ensure the lasting contribution toward meeting our Nation's energy and environmental challenges. Research activities are designed to address the technical, cost, safety, and security issues associated with various reactor concepts. The four technical areas are Light Water Reactor Sustainability (LWRS), Small Modular Reactors (SMR), Advanced (Non-Light Water) Reactor Concepts, and Advanced SMRs.

A.2.3 Nuclear Energy Advanced Modeling and Simulation (NEAMS) Program

The mission of the NEAMS program is to develop and deploy the NEAMS ToolKit, comprised of advanced computational tools, for use by government, industry, and academia in nuclear R&D, design, and analysis. These advanced computational tools employ scalable simulation methods on high performance computing architectures in combination with a science-based, mechanistic approach to physics modeling to allow scientists and engineers to better understand reactor materials properties and coupled phenomena in nuclear energy systems. The NEAMS ToolKit spans length scales from atomic to mesoscale to continuum, and time scales from picoseconds to seconds to days. NEAMS tools are currently being used to help evaluate advanced nuclear fuels and reactor concepts, design and analyze nuclear fuel experiments, and explore potential breakthroughs in the use of transient test reactors.

A.2.4 Nuclear Energy Enabling Technologies (NEET) Crosscutting Technology Development (CTD)

The NEET CTD program conducts R&D in crosscutting technologies that directly support and enable the development of new and advanced reactor designs and fuel cycle technologies. These technologies will advance the state of nuclear technology, improving its competitiveness and promoting continued contribution to meeting our Nation's energy and environmental challenges. The activities undertaken in this program complement those within the RC RD&D and FC R&D programs. The knowledge generated through these activities will allow NE to address key challenges affecting nuclear reactor and fuel cycle deployment with a focus on cross-cutting innovative technologies.

A.2.5 Nuclear Science User Facilities (NSUF)

DOE-NE funds access to world-class capabilities to facilitate the advancement of nuclear science and technology. This mission is supported by providing cost-free access to state-of-the-art experimental irradiation testing and PIE facilities as well as technical assistance including the design and analysis of reactor experiments. NSUF and its partner facilities represent a prototype laboratory for the future. This unique model is best described as a distributed partnership with each facility bringing exceptional capabilities and expertise to the relationship including reactors, beamlines, state-of-the-art instruments, hot cells and, most importantly, expert technical leads. Together, these capabilities and people create a nation-wide infrastructure that allows the best ideas to be proven using the most advanced capabilities. Through NSUF, researchers and their collaborators are building on current knowledge to better understand the complex behavior of materials and fuels under irradiation.

The NSUF allows research teams to obtain no-cost access to designated capabilities at the following facilities:

- Argonne National Laboratory Intermediate Voltage Electron Microscope (IVEM)
- Brookhaven National Laboratory National Synchrotron Light Source II (NSLS II)
- Center for Advanced Energy Studies Microscopy and Characterization Suite (MaCS)
- Idaho National Laboratory
- Illinois Institute of Technology

- Massachusetts Institute of Technology
- North Carolina State University
- Oak Ridge National Laboratory
- Pacific Northwest National Laboratory
- Purdue University
- University of California, Berkeley
- University of Michigan
- University of Nevada, Las Vegas
- University of Wisconsin, Madison
- Westinghouse Materials Center for Excellence.

Part I, Section B.2 of this FOA describes application options for projects requiring NSUF capabilities.

NOTE: Applicants requesting R&D financial support with a joint request for NSUF access will be limited to the workscopes in NSUF-1 and NEAMS-2. Workscopes in eligible areas have been tailored to align NSUF capabilities with focused NE program and mission priorities. Applicants requesting NSUF Access Only will apply to the NSUF-2 workscope, a broader workscope focused on NE mission priorities and also tailored to align with NSUF capabilities.

A.2.6 NSUF Fuels and Materials Library

The NSUF Fuels and Materials Library is a cataloged collection of irradiated materials and is a critical component of the NSUF. The Library was established to reduce costs and take advantage of new ideas and future analysis techniques and equipment. Researchers are encouraged to use the Library materials to develop research concepts. The catalog of available materials is available under the "User Resources" tab located at http://nsuf.inl.gov/default.aspx?Page=Sample%20Library&cat=1&Display=5&id=222. In order to continue the expansion of the Library, the NSUF Program Office may recommend irradiating a larger number of samples than required for the proposed research. These samples will be added to the Library. In addition, all specimens remaining after three years of PIE will be moved into the Library. Principal Investigators (PIs) of all future awarded applications to study specimens added to the Library from previous awarded irradiation tests will be put in contact with the PI(s) of the project that produced the specimens for potential collaboration. Collaboration with past NSUF PIs is encouraged, however permission to use previously generated materials currently in the NSUF Library is not required. DOE owns all materials in the Library.

NSUF capabilities are described in detail at http://nsuf.inl.gov.

B. FUNDING OPPORTUNITIES

DOE is seeking applications from U.S. universities, national laboratories, and industry to conduct Program Supporting (PS), Mission Supporting (MS), Program Directed (PD), and NSUF-supported nuclear energy-related research to help meet the objectives of the major NE-funded research programs.

Specifically, this FOA contains three separate funding opportunity areas defined as follows:

B.1 U.S. University-led PS/MS R&D Projects

These funding opportunities are available to U.S. university-led teams. In general, PS R&D is focused more directly on programmatic needs and is defined by the statement of objectives developed by the responsible programs. PS R&D, and within NSUF affiliated workscopes, must be focused and responsive to the representative statement of objectives, which is not specific to a discipline but can be limiting as defined by the project objective. In comparison, MS R&D is generally more creative, innovative, and transformative than PS R&D, but must also support the NE mission. MS R&D activities could also produce breakthroughs in nuclear technology or could include research in the fields or disciplines of nuclear science and engineering that are relevant to NE's mission but may not fully align with the specific initiatives and programs represented by PS objectives. U.S. university PIs are invited to propose research projects in response to this area of the FOA and the associated PS and MS workscopes contained in Appendix A.

The RCUK Energy Program, led by the Engineering and Physical Science Research Council (EPSRC) in the UK has announced a UK funding opportunity for certain workscopes in Appendix A. The UK funding opportunity will support UK researchers in US/UK collaborations in the following areas:

- Radioisotope Retention in Graphite and Graphitic Materials (RC-2)
- Materials Ageing and Degradation (RC-7)
- Reactor Safety Technologies (RC-9)
- Materials Recovery (FC-1.2)
- Advanced Waste forms (FC-1.3) including; Waste forms development Thermodynamics of waste glasses and melts (FC-1.3a), Fuel Processing Off-Gas Management- Tritium separations technology (FC-1.3b), Fuel processing Off-Gas management- Rb interaction with container materials (FC-1.3c).
- Advanced Fuels (FC-2) including; Reactor pool side non-destructive characterization techniques for advanced fuel concepts (FC-2.1) and Extreme performance metal alloy cladding for fast reactors (FC-2.2), critical heat flux for accident tolerant fuels (FC-2.3).
- Used Nuclear fuel disposition: Disposal (FC-4).
- Nuclear Energy Advanced modeling and simulation (NEAMS-1) including only; NEAMS 1.1 (Atomistic and mesoscale modelling and simulation of nuclear fuels, cladding and reactor structural materials), NEAMS 1.2 (Macroscale fuel performance), NEAMS 1.4 (Thermal Hydraulics) and NEAMS 1.5 (Structural Mechanics).

B.2 U.S. University-, National Laboratory-, or Industry-led PS R&D Projects

These funding opportunities are available to teams led by U.S. university, national laboratory, or U.S.-incorporated industry PIs. Proposed research projects in response to this area of the FOA should meet the objectives of the NEET CTD Program, and within the NSUF workscopes, meet

the identified objectives of the RC RD&D, FC R&D, and NEET CTD Programs as described in the workscopes contained in Appendix B of this FOA.

B.2.1 Note for Nuclear Science User Facilities Access Projects

NSUF access project applications will require a Letter of Intent (LOI) in addition to the pre-application and, if invited (see Part V, Section B.1), a full application. NSUF access project applications will also require a feasibility review in addition to the relevancy and technical reviews. Important aspects of NSUF access applications are described in Appendix E and should be seriously considered when preparing applications. It is strongly recommended that all potential proposers review the contents of the NSUF website for vital information at http://nsuf.inl.gov.

The NSUF does not provide funding to the proposing researcher to support salaries, tuition, travel, or other costs typically supported via NE Program R&D funds.

All awarded NSUF access projects will be fully funded for the entire duration of the project. NSUF access project attributes:

- U.S. university PIs may apply for NSUF access with a joint request for R&D financial support as stated in the NEAMS-2 workscope
- U.S. university, national laboratory and industry PIs may apply for NSUF access with a joint request for R&D financial support as stated in the NSUF-1 workscope
- U.S. universities, national laboratory and industry PIs may apply for only NSUF access without a joint request for R&D financial support as stated in the NSUF-2 workscope

NSUF R&D projects may have a R&D component that is complemented by the unique capabilities of NSUF. The R&D portion of the project cannot exceed $500,000 in Appendix A or B. Eligible workscopes for a NSUF R&D project are found in Appendix A & B and applications must comply with the provisions of Appendix E. **Since NSUF projects involving reactor neutron irradiation and PIE combined may last up to seven years in duration, greater flexibility in the R&D funding distribution can be established in order to better accommodate the actual resource allocation requirements of the project.** Those applications requesting research support, though limited to a total of three years of funding, may request a project period of performance to spread the funding over the entire length of the project. For irradiation only, PIE only, and beamline applications, a standard continuous funding profile should remain adequate. The PIE phase of all NSUF projects is limited to three years in duration. R&D funding shall not be utilized to directly supplement activities funded by NSUF.

NOTE: All materials and samples must be available at time of full application submittal unless proof can be given that the process to fabricate samples is already well established and the equipment and resources are available on demand such that samples are available approximately five months after project initiation. NSUF will not support preliminary fuels, materials, or instrumentation development work, i.e. development must be at irradiation testing stage. Projects whose relevancy is based solely or primarily on fusion energy needs will not be considered. Applications must include a list of publications that resulted from previous NSUF supported

projects (publications to be included in the Benefit of Collaboration document).

Projects not requiring R&D financial support may apply for NSUF access only projects in response to this area of the FOA and the associated workscope contained in Appendix B of this FOA, wherein only no-cost access to capabilities are sought to perform research in nuclear science.

Additional information on the NSUF process is included in Appendix E.

NOTE: Access to NSUF capabilities will require agreement and final signature to the User Agreement (copy provided in Appendix F and at https://atrnsuf.inl.gov/documents/ATRNSUFStandardNon-PropUserAgreement.pdf). **The terms and conditions of the User Agreement are non-negotiable and failure to accept the terms and conditions of the User Agreement will terminate processing and review of the NEAMS-2, NSUF-1, or NSUF-2 applications.** In order to ensure compliance throughout the application review process, applicants must indicate in the LOI that the User Agreement has been read, understood, and the terms and conditions are accepted. Further, submission of a pre-application and a full application indicates the applicant will comply and agree to the terms and conditions of the User Agreement. Upon award of an NSUF supported project, the User Agreement must be signed before activities will begin on the project.

B.3 U.S. University-led IRP Projects

IRPs comprise a significant element of DOE's innovative nuclear research objectives and represent the PD component of the NE strategy to provide R&D solutions most directly relevant to the near-term, significant needs of the NE R&D programs. IRPs are significant projects within specific research areas. IRPs are intended to develop a capability within each area to address specific needs, problems, or capability gaps identified and defined by NE. These projects are multidisciplinary and require multi-institutional partners. IRPs may include a combination of evaluation capability development, research program development, experimental work, and computer simulations. IRPs are intended to integrate several disciplinary skills in order to present solutions to complex systems design problems that cannot be addressed by a less comprehensive team.

Although a proposing team must be led by a lead university PI and include at least one additional university collaborator, the proposed project team may include multiple universities and non-university partners (e.g., industry/utility, minority-serving institution (MSI), national laboratory, underrepresented group, and international). U.S. university PIs are invited to propose research projects in response to this area of the FOA and the associated PD workscopes contained in Appendix C of this FOA.

As described above, workscopes for the respective FOA areas may be found in the appendices to this FOA as follows:

- Appendix A: "Workscopes for U.S. University-led Program and/or Mission Supporting R&D Projects. R&D support and associated NSUF access can only be proposed in specific workscopes"

- Appendix B: "Workscopes for U.S. University-, National Laboratory-, or Industry-led Program Supporting R&D Projects" R&D support and associated NSUF access and NSUF Access Only can be proposed in specific workscopes;
- Appendix C: "Workscopes for U.S. University-led Program Directed Integrated Research Projects (IRP)"

DOE has significant interest in leveraging multiple needs to the extent possible. Accordingly, Appendix D provides a description of key data needs for validating advanced modeling and simulation tools being developed by NE. Researchers should evaluate their applications in light of these data needs and highlight any potential for capturing key data.

PART II – AWARD INFORMATION

A. TYPE OF AWARD INSTRUMENT

DOE anticipates awarding cooperative agreements under this CINR FOA, with the exception of awards to national laboratories, which will be funded through field work proposals (FWP).

B. ESTIMATED FUNDING

The estimated amounts identified for each of the FOA areas are specified below. Funding for all awards and future budget periods are contingent upon the availability of funds appropriated by Congress for the purpose of this program.

B.1 U.S. University-led PS/MS R&D Projects

DOE currently estimates that it will fund approximately $40 million in awards for this FOA area.

B.2 U.S. University-, National Laboratory-, or Industry-led PS R&D Projects

DOE currently estimates that it will fund approximately $12 million in awards for this FOA area.

B.2.1 Nuclear Science User Facilities Projects

DOE currently estimates that it will fund approximately $6 million in award value for this FOA area.

B.3 U.S. University-led PD IRP Projects

DOE currently estimates that it will fund approximately $18 million in awards for this FOA area.

C. MAXIMUM AND MINIMUM AWARD SIZE

Maximum and minimum award sizes are identified for the four FOA areas below:

C.1 U.S. University-led PS/MS R&D Projects

Ceiling (i.e., the maximum amount for an individual award made under this area):

- PS: up to $800,000 (3-year project), except as explicitly noted in individual workscopes.
- MS: up to $400,000 (3-year project), except as explicitly noted in individual workscopes.

Floor (i.e., the minimum amount for an individual award made under this area): None.

C.2 U.S. University-, National Laboratory-, or Industry-led PS R&D Projects

Ceiling (i.e., the maximum amount for an individual award made under this area):

- PS: up to $1,000,000 (3-year project), except as explicitly noted in individual workscopes.

Floor (i.e., the minimum amount for an individual award made under this announcement): None.

C.2.1 Nuclear Science User Facilities Projects

Ceiling (i.e., the maximum amount for an individual award made under this area):
Irradiation/PIE Project: $4,000,000 NSUF Access Value (up to a 7-year project).

Floor (i.e., the minimum amount for an individual award made under this announcement): None.

C.3 U.S. University-led IRP Projects

Ceiling (i.e., the maximum amount for an individual award made under this area):

- PD: up to $5,000,000 (3-year project), except as explicitly noted in individual workscopes

Floor (i.e., the minimum amount for an individual award made under this announcement): None.

D. EXPECTED NUMBER OF AWARDS

The number of awards for each of the four FOA areas is identified below. The number of awards is dependent on the size of the awards. DOE reserves the right to make more or fewer (or even no awards) depending on funding availability and/or the quality of the applications.

D.1 U.S. University-led PS/MS R&D Projects

DOE anticipates making up to approximately 40 awards under this area.

D.2 U.S. University-, National Laboratory-, or Industry-led PS R&D Projects

DOE anticipates making up to 15 awards under this area.

D.2.1 Nuclear Science User Facilities Projects

DOE anticipates making up to 10 awards under this area.

D.3 U.S. University-led PD IRP Projects

DOE anticipates making 1 award per IRP workscope.

E. ANTICIPATED AWARD SIZE

The anticipated award size for each of the three FOA areas are identified below. (Amounts represent anticipated maximum per award.)

E.1 U.S. University-led PS/MS R&D Projects

DOE anticipates that awards will be up to $800,000/award for PS projects and up to $400,000/award for MS projects (except as explicitly stated in individual workscope areas).

E.2 U.S. University-, National Laboratory-, or Industry-led PS R&D Projects

DOE anticipates that R&D awards will be up to $1,000,000/award (except as explicitly stated in individual workscope areas).

E.2.1 Nuclear Science User Facilities Projects

DOE anticipates that award access value (funds not provided to PI) will fall within the following ranges:

- Irradiation only: $500K to $1.0M
- Irradiation /PIE: $500K to $4.0M
- Beamline or PIE only: $50K to $750K.

E.3 U.S. University-led PD IRP Projects

DOE anticipates that awards will be up to $5,000,000 except as stated in the individual workscopes.

F. PERIOD OF PERFORMANCE

DOE anticipates making awards for up to 3 years for each area with the exception of ***NSUF-1, NEAMS-2 and NSUF-2 awards, which may take up to 7 years if irradiation and PIE is requested.*** Assuming DOE makes awards under this FOA by September 2017, successful applications shall begin no later than October 1, 2017; additionally, each successive budget period within the project period of performance should begin on October 1st of each year during the overall project period of performance. Proposing different start dates for the project and budget periods may make the application ineligible for award; if a different project start date other than October 1, 2017, is absolutely necessary for the successful performance of the project, it must be fully documented and justified in the application for consideration by DOE.

G. TYPE OF APPLICATION

DOE will accept only new applications for each of the three areas defined in Part I, Section B of this FOA. Applications made to previous FOAs will not be considered.

PART III – ELIGIBILITY INFORMATION

A. ELIGIBLE APPLICANTS

This FOA is open to U.S. universities, national laboratories, and industry.

Research consortiums may be composed of diverse institutions including academia, national laboratories, non-profit research institutes, industry/utilities, and international partners. Research teams should strive to achieve the synergies that arise when individuals with forefront expertise in different methodologies, technologies, disciplines, and areas of content knowledge approach a problem together, overcoming impasses by considering the issue from fresh angles and discovering novel solutions.

DOE-NE strongly encourages diversifying its research portfolio through effective partnerships with industry, underrepresented groups, and MSI, which may receive funding support from the project. International partners are encouraged to participate, however no U.S. government funding will be provided to entities incorporated outside of the United States. DOE-NE will evaluate the benefit and contribution of any such proposed partnerships as part of its program relevancy evaluation and scoring.

In Appendix A and C, non-university collaborators in composite can have no more than 20% of the total funds provided by the government.

A collaborator is an individual that makes a defined, material contribution that is critical to the success of the project. **Any individuals that do not meet these criteria should not be listed as collaborators on the application form.**

1. Domestic Entities

For-profit entities, educational institutions, and nonprofits[1] that are incorporated (or otherwise formed) under the laws of a particular state or territory of the United States are eligible to apply for funding as a prime or subrecipient (only educational institutions may apply as a prime recipient for U.S. university-led PS, MS, and/or PD projects).

State, local, and tribal government entities are eligible to apply for funding as a subrecipient (for U.S. university-, national laboratory-, or industry-led PS and/or MS projects only).

DOE/National Nuclear Security Administration (NNSA) Federally Funded Research and Development Centers (FFRDCs) and DOE Government-Operated Government-Owned laboratories are eligible to apply for funding as a prime recipient (for PS or MS projects under NEET CTD), team member, or subrecipient. If an FFRDC is proposed as a team member or subrecipient, the requirements contained in Part III, Section C apply.

Non-DOE/NNSA FFRDCs and non-DOE Government-Operated Government-Owned laboratories are eligible to apply for funding as a subrecipient, but are not eligible to apply as a prime recipient.

---

[1] Nonprofit organizations described in section 501(c)(4) of the Internal Revenue Code of 1986 that engaged in lobbying activities after December 31, 2005, are not eligible to apply for funding.

Federal agencies and instrumentalities (other than DOE) are eligible to apply for funding as a subrecipient, but are not eligible to apply as a prime recipient.

U.S. Incorporated Foreign Entities

Foreign entities, whether for-profit or otherwise, are eligible to apply for funding under this FOA as either a prime recipient or subrecipient subject the requirements in 2 Code of Federal Regulation (CFR) 910.124.

Incorporated Consortia

Incorporated consortia, which may include domestic and/or foreign entities, are eligible to apply for funding as a prime recipient (U.S. university-, national laboratory-, or industry-led PS and/or MS projects only) or subrecipient. For consortia incorporated (or otherwise formed) under the laws of a State or territory of the U.S., please refer to "Domestic Entities" above. For consortia incorporated in foreign countries, please refer to the requirements in "U.S. Incorporated Foreign Entities" above.

Unincorporated Consortia

Unincorporated consortia, which may include domestic and foreign entities, must designate one member of the consortium to serve as the prime recipient/consortium representative (U.S. university-, national laboratory-, or industry-led PS and/or MS projects only). The prime recipient/consortium representative must be incorporated (or otherwise formed) under the laws of a State or territory of the U.S. The eligibility of the consortium will be determined by the eligibility of the prime recipient/consortium representative.

Application Restrictions

The following application restrictions apply:

- Applicants are ineligible to apply to any area of this FOA as a lead PI under any of the following circumstances:
    1. The PI has a currently funded IRP that will be active after December 31, 2017.
    2. The PI has three or more R&D projects that will still be active after December 31, 2017.
    3. The PI has a no-cost extension on any DOE-NE funded project (excluding Infrastructure) that will still be active beyond December 31, 2017.
- An academic PI can submit up to six pre-applications (three of those applications may be as lead PI).
- PIs cannot submit the same application to multiple workscope areas.
- A PI may have no more than one IRP or three R&D projects funded at any time, and may not submit more full applications than would be allowed by these restrictions.
- Applications submitted in response to research requested by the Appendix B are limited to three pre-applications per institution per workscope area. If an academic PI is designated as the lead, these submissions will count toward the above overall university researcher limitation of being associated with no more than six pre-applications total in response to all areas of this FOA, with no more than three of those associations being as the lead PI.

- For IRPs, an applicant is ineligible to submit an application as the PI if (s)he is designated as PI for more than one currently funded DOE-NE project that will still be active beyond December 31, 2017. Eligibility Flowchart
- If a PI chooses to submit an IRP to this FOA, that PI is not allowed to submit R&D applications as the lead.
- Applications requesting NSUF access and R&D support will be evaluated on a case-by-case basis with respect to these eligibility requirements.
- Access only requests for NSUF are not bound by these eligibility restrictions.

NOTE: Applications submitted to this FOA will be awarded to the applicant institution listed and will not be transferred pre-award to another if a lead PI changes institution. Any additional changes to partners/collaborators will need to be approved by the DOE contracting officer.

B. COST SHARING

For applications led by universities, cost sharing is encouraged, but not required. If cost sharing is provided, see 2 CFR 200 for the applicable cost sharing guidance and Part VIII, Section H below. Cost sharing is **NOT** a scored review criteria.

For applications led by all other entities (i.e., other than universities and FFRDCs), the provisions of the Energy Policy Act of 2005, Section 988, apply and a cost share of at least 20% of the total allowable costs of the project (i.e., the sum of the government share, including FFRDC contractor costs if applicable, and the recipient share of allowable costs equals the total allowable costs of the project) and must come from non-Federal sources unless otherwise allowed by law. (See 2 CFR 200.29 for more information on the cost sharing requirements.)

The DOE/NNSA FFRDC contractor cost is not included in the total approved budget for the award, because DOE/NNSA will pay the DOE/NNSA FFRDC contractor portion of the effort under an existing DOE/NNSA contract. Recipient is not responsible for reporting on that portion of the total estimated cost that is paid directly to the DOE/NNSA FFRDC contractor.

By accepting federal funds under this award, you agree that you are liable for your percentage share of allowable project costs, on a budget period basis, even if the project is terminated early or is not funded to its completion. After award, failure to provide the cost sharing required may result in the subsequent recovery by DOE of some or all the funds provided under the award.

Cost sharing requirements do not apply to the value of the NSUF access.

C. OTHER ELIGIBILITY REQUIREMENTS

C.1 FFRDC Contractors

FFRDC contractors may be proposed as a lead institution (except as otherwise prohibited by this FOA) or team member on another entity's application subject to the following guidelines:

- **Authorization for non-DOE/NNSA FFRDCs**. The Federal agency sponsoring the FFRDC contractor must authorize in writing the use of the FFRDC contractor on the proposed project and this authorization must be submitted with the application. The use of a FFRDC contractor must be consistent with the contractor's authority under its award.
- **Authorization for DOE/NNSA FFRDCs**. The cognizant contracting officer for the FFRDC must authorize in writing the use of a DOE/NNSA FFRDC contractor on the proposed project and this authorization must be submitted with the application. The following wording is acceptable for this authorization:

> "Authorization is granted for the Fill-in 1: [Name] Laboratory to participate in the proposed project. The work proposed for the laboratory is consistent with or complimentary to the missions of the laboratory, will not adversely impact execution of the DOE/NNSA assigned programs at the laboratory."

NOTE: Individual Letters of Authorization may be submitted or submitted as blanket permission if all FFRDC/non-FFRDC management has been notified of all submissions and acknowledgment of all participants are identified. Identification of participants by name is to be included in the body or as a separate list.

NOTE: Letter of authorization is not required for NSUF Technical Leads unless the Technical Lead is requesting R&D funding support under this FOA.

- **Value/Funding**: The value of, and funding for, the FFRDC contractor portion of the work will not normally be included in the award to a successful applicant. Usually, DOE will fund a DOE FFRDC contractor through the DOE field work proposal (FWP) system and other FFRDC contractors through an interagency agreement with the sponsoring agency.
- **Cost Share**: The applicant's cost share requirement will be based on the total cost of the project (excluding NSUF access value). FFRDC costs are included as part of the government cost share.
- **FFRDC Contractor Effort** (except for project(s) in support of NEET CTD and NSUF):
  - The scope of work to be performed by the FFRDC contractor may not be more significant than the scope of work to be performed by the prime applicant.
  - The FFRDC contractor effort, in aggregate, shall not exceed 20% of the total estimated costs of the projects.
- **Responsibility**: The applicant, if successful, will be the responsible authority regarding the settlement and satisfaction of all contractual and administrative issues including, but not limited to, disputes and claims arising out of any agreement between the applicant and the FFRDC contractor.

Table 1 provides a summary of Parts II and III of this FOA.

Table 1. Summary of Parts II and III.

		Applicable Workscope Appendix	Estimated Available Budget	Maximum Award Size	Project Duration	Cost Share	Collaboration
University-led NEUP Projects	PS	Appendix A	$40,000,000	$800,000	Up to 3 years	Encouraged but not required	University, national laboratory, industry, and foreign collaborations are encouraged but no U.S. funding can go to entities that are not incorporated in the U.S.
	MS			$400,000			
University-, National Laboratory-, or Industry-led NEET CTD Projects	PS	Appendix B	$12,000,000	$1,000,000	Up to 3 years	Required by Industry leads	
NSUF Projects	PS	Appendix A & Appendix B	R&D: $3,000,000-$5,000,000 NSUF: $6,000,000	Refer to maximum award size of the project funding and NSUF funding.	Up to 7 years for Irradiation and PIE. Up to 3 years for PIE only or Irradiation only	Required for Industry seeking R&D support	
University-led Integrated Research Projects-NEUP	PD	Appendix C	$18,000,000	$5,000,000	Up to 3 years, unless otherwise noted	Encouraged but not required	

PART IV – APPLICATION AND SUBMISSION INFORMATION

NOTE: The following requirements apply to all three areas defined in Part I, Section B. of this FOA unless specific requirements are identified.

A. ADDRESS TO REQUEST APPLICATION PACKAGE

Application forms and instructions are available at the NEUP website. To access these materials, (1) go to http://www.NEUP.gov, (2) select "Login" from the top right hand corner of the screen, (3) enter your user credentials, (4) select "Applications" from the menu, and (5) click on "Create New Application" for the type of application you are creating. Apply at http://www.NEUP.gov.

B. DOCUMENT FORMAT REQUIREMENTS

All non-budget documentation (use templates where provided) is to be prepared using standard 8.5" × 11" paper with 1-inch margins (top, bottom, left, right), using a font size no smaller than Times New Roman 11 point. The preferred file format is PDF for all documents except for spreadsheets. All Spreadsheets are to be uploaded in Excel file format to the application form. Do **NOT** lock any cells in the spreadsheet.

C. LETTER OF INTENT AND PRE-APPLICATION

C.1 NSUF Letter of Intent (LOI)

(Mandatory for NSUF Projects Only)

LOIs must be submitted by the date and time specified in Part IV, Section F.1. Pre-applications for NSUF projects will not be accepted without submittal of a LOI by the due date.

All NSUF applications must be (1) initiated with a LOI and (2) generated in close collaboration with a Technical Lead from the NSUF facility to define scope and feasibility of the project. Awarded NSUF projects are to be fully funded for the entire duration of the project; thus, where applicable, a firm cost estimate must be prepared for the NSUF portion of the project in addition to the required budget for the R&D funding. Since the cost estimate for the NSUF provided workscope to be included in the full application must be obtained from the particular NSUF facility or facilities where the work is to be performed, the application must be generated in close collaboration with a Technical Lead from the NSUF facility wherein the scope and feasibility of the project are established. The scope of work and the cost estimate are important considerations during the feasibility review (outlined in Part V, Section A.2). It is imperative that all potential applicants establish immediate contact with a Technical Lead when preparing the pre-application to produce the most accurate feasibility result. **Pre-applications will not be accepted without submission of a LOI identifying the Technical Lead and NSUF facility to be used by the date and time specified in Part IV, Section F.1.**

In addition to the NSUF Technical Lead, LOIs should include the following:

- Title of the project
- Identification and primary NSUF Technical Lead
- Identification of NSUF facilities

- Proposing and associated institution
- Co-PIs and associated institutions
- Type of project (irradiation/PIE, irradiation-only, PIE-only, or beamline)
- Applicable workscope: NEAMS-2, NSUF-1 for R&D support with NSUF Access (specify workscope subpart [e.g., 1.3c]) or NSUF-2 for NSUF Access Only
- A brief (<300 words) project description.

C.1.1 User Agreement Terms & Conditions Checkbox (Required for all Applicants)

Access to NSUF capabilities will require agreement and final signature to the User Agreement (copy provided in Appendix F and at https://atrnsuf.inl.gov/documents/ATRNSUFStandardNon-PropUserAgreement.pdf). **The terms and conditions of the User Agreement are non-negotiable and failure at accept the terms and conditions of the User Agreement will terminate processing and review of the NEAMS-2, NSUF-1, or NSUF-2 applications.** In order to ensure compliance throughout the application review process, applicants must indicate in the LOI that the User Agreement as been read, understood, and the terms and conditions are accepted. Further, submission of a pre-application and a full application indicates the applicant will comply and agree to the terms and conditions of the User Agreement. Upon award of an NSUF supported project, the User Agreement must be signed before activities will begin on the project. An applicant cannot submit an LOI without checking the "I Agree" checkbox.

Points of contact (POCs) for the NSUF facilities, as well as facility descriptions, are provided on the NSUF website at http://nsuf.inl.gov. For assistance in identifying a NSUF Technical Lead or facility POC, please contact NSUF staff members listed on the website.

C.1.2 LOI Submittal Instructions

Application forms and instructions are available at the NEUP website. To access these materials, (1) go to http://www.NEUP.gov, (2) select "Login" from the top right hand corner of the screen, (3) enter your user credentials, (4) select "Applications" from the menu, and (5) Find "FY 2017 NSUF Letter of Intent" and click on "Create New Application" for the type of application you are creating.

2-page limit. Name File: 2017 LOI "Insert ID #"

C.2 R&D/NSUF Pre-applications

(Mandatory except for IRPs)

Pre-applications are a mandatory requirement for PS and/or MS and/or NSUF Projects (in Appendix B) for U.S. university-, national laboratory-, or industry-led projects. Pre-applications are not required for PD IRPs. Pre-applications must be submitted by the date and time specified in Part IV, Section F.2.

The PI and named collaborators identified in the pre-application may not be changed in the full application without adequate justification and consent of the Contracting Officer.

The following information shall be provided for all pre-applications:

C.2.1 Pre-application Narrative

Applicant shall provide a narrative that addresses the specific information below:

- Title of project.
- Technical Workscope Identification (e.g., FC-1.1). The PI is responsible for selecting the appropriate workscope, and this area may not be changed between the pre-application and full application.
- Name of Project Director/PI(s) and associated organization(s).
- A summary of the proposed project, including a description of the project and a clear explanation of its importance and relevance to the objectives.
- Major deliverables and outcomes the R&D will produce.
- Estimated cost of project (not including value of NSUF access).
- Timeframe for execution of proposed project (specify if the R&D is for a one-, two-, or three-year period or up to seven years for NSUF).
- Specific facilities and equipment access requirements (NSUF only).
- Source, scope and duration of R&D funding associated with request for NSUF Access Only (NSUF-2 only).

3-page limit. Name File: 2017 RPA Narrative "Insert ID #"

C.2.2 Benefit of Collaboration

Applicant shall provide a narrative that includes an explanation of the contribution that will be made by the collaborating organizations and/or facilities to be utilized. It can contain brief biographies of staff and descriptions of the facilities wherein the research will be conducted. Please indicate within this section if the application has benefit or influence on other ongoing or proposed NE/EM R&D projects (e.g., modeling and simulation in one application and effect validation in a separate application).

NSUF Applicants Only: Applications must include a list of publications that resulted from previous NSUF supported projects (publications to be included in the Benefit of Collaboration document).

4-page limit. Name File: 2017 RPA Benefit of Collaboration "Insert ID #"

C.2.3 Principal Investigator Vitae

The lead PI shall provide a brief vitae that lists the following:

- Contact information.
- Education and Training: Undergraduate, graduate, and postdoctoral training. Provide institution, major/area, degree, and year.
- Research and Professional Experience: Beginning with the current position list, in chronological order, professional/academic positions with a brief description.

- Publications: Provide a list of up to 10 publications most closely related to the proposed project. For each publication, identify the names of all authors (in the same sequence in which they appear in the publication), the article title, book or journal title, volume number, page numbers, year of publication, and website address if available electronically.
- Patents, copyrights, and software systems developed may be provided in addition to or substituted for publications.
- Synergistic Activities: List no more than 5 professional and scholarly activities related to the effort proposed.

2-page limit. Name File: 2017 RPA "Last Name of Individual" "Insert ID #.pdf"

C.2.4 Agreement Requirements

Each institution serving as a team member to the proposed project must be identified in the pre-application, with their commitment made to collaborate in the FOA process.

D. CONTENT AND FORM OF ALL FULL APPLICATIONS

Applicants must complete the mandatory forms and any applicable optional forms (e.g., Environmental Checklist) in accordance with the instructions on the forms and the additional instructions below. Files that are attached to the forms must be in Adobe Portable Document Format (PDF) unless otherwise specified in this announcement. Document templates can be found on the NEUP website by clicking the 'Documents' button at the bottom of the front page (https://neup.inl.gov/SitePages/Related_Documents.aspx).

NOTE: The review process for full applications (PS/MS R&D) is a semi-blind process. Please be sure to review the requirements below carefully as non-compliant applications may be excluded from review.

D.1 Conflict-of-Interest (COI) Acknowledgement (Checkbox)

COI may exist due to previous efforts performed by the applicant or assistance provided in program direction and other mission related activities. Check the appropriate box on the form signifying whether a potential COI exists. If a COI has been identified by you or a collaborator, you must attach a file that explains the conflict, whether you feel it is significant or not, along with your rationale; and how you will avoid, neutralize, or mitigate the potential conflict. If no COI exists, check the box and proceed.

Name File: 2017 CFA COI "Insert ID #.pdf"

D.2 SF 424 (R&R)

Applicants shall complete the SF424 (R&R) form available at www.NEUP.gov and upload a completed PDF copy of the form with the application.

Name File: 2017 CFA SF424RR "Insert ID #.pdf"

D.3 Research and Related Other Project Information

Applicants shall complete items 1–6 on the Research and Related Other Project Information form available at www.NEUP.gov and upload a completed PDF copy of the form as well as complete the NEUP application form (items listed below).

Name File: 2017 CFA R&R Other Project Information "Insert ID #.pdf"

D.4 Project Summary/Abstract

(Use Provided Template on Application Site)

The project summary/abstract must contain a summary of the proposed activity suitable for dissemination to the public. It should be a self-contained document that identifies the name of the applicant; the project director/PI(s); the project title; list of major deliverables; scope and objectives of the project; a description of the project, including major tasks (phases, planned approach, etc.) and methods to be employed; the potential impact of the project (i.e., benefits, outcomes); and major participants (for collaborative projects). This document must not include any proprietary or sensitive business information as DOE-NE may make it available to the public after awards are made.

- 2-page limit for IRPs. (Appendix C Template)
- 1-page limit for R&D. (Appendix A Template) (Appendix B Template)

Name File: 2017 CFA Technical Abstract "Insert ID #.pdf"

D.5 Project Narrative

Applicant shall provide a written narrative addressing its strategy to execute R&D that supports the specified Technical Workscope. The documentation provided shall include the items specified below:

- Application title.
- Final Technical Workscope Identification (FC-1.1, RC-1, etc.).
- Project Objectives: Provide a clear, concise statement of specific objectives/aims of the proposed project.
- Proposed scope description.
- Logical path to accomplishing scope, including descriptions of tasks. This section will provide a clear, concise statement of the specific objectives/aims of the proposed project. This section should be formatted to address each of the merit review criterion and sub-criterion listed in Part V, Section A. Provide sufficient information so that reviewers will be able to evaluate the application in accordance with these merit review criteria. **DOE has the right to evaluate and consider only those applications that separately address each of the merit review criteria**.
- Relevance and Outcomes/Impacts: This section will explain the program relevance/priority of the effort to the objectives in the program announcement and the expected outcomes and/or impacts.

- Schedule: Define timelines for executing the specified workscope, including all important activities or phases of the project. Successful applicants must use this schedule when reporting project progress.
- Milestones and deliverables.
- Type/Description of facilities that will be used to execute the scope (if applicable).
- The roles and responsibilities of each partnering organization in the execution of the workscope. Describe the role and work to be performed by each participant/investigator, business arrangements between the applicant and participants, and how the various efforts will be integrated and managed.
- Unique challenges to accomplishing the work and planned mitigations.
- Information, data, plans, or drawings necessary to explain the details of the application.
- Evaluate the application in light of the data needs for verification and validation of modeling and simulation tools identified in Appendix D and highlight any potential for capturing key data, if applicable.
- NSUF Access Only: Source, scope and duration of R&D funding associated with request for NSUF Access Only

NOTE: References are included in the page limits.

The R&D technical narrative (including R&D applications requesting NSUF access) shall NOT include the following information:

- Cost and pricing information.
- Identification, by individual name or name of institution, of any teaming partner or lead institution. Examples of acceptable ways of referring to partners will be posted on the NEUP website.
- Official name or title of facilities used to execute scope. Describe the facility by function and/or technical attributes such as an accelerator, a test reactor, etc.

NOTE: For applications requesting NSUF access, NSUF facilities may be named.

Page limits include cover page, table of contents, charts, graphs, maps, photographs, tables, and other pictorial presentations while complying with the document format instructions in Part IV, Section B. **Evaluators will not review pages above the specified limit.**

- All R&D Projects: 10-pages
- All NSUF Projects: 15-pages
- All EM IRP Projects: 20-pages
- All NE IRP Projects: 50-pages

Do not include any internet addresses (URLs) that provide information necessary to review the application; information contained in these sites will not be reviewed.

Name File: 2017 CFA Technical Narrative "Insert ID #.pdf"

D.6 Vitae (Technical Expertise and Qualifications)

Applicant shall name all teaming partners by name and organization, as well as their proposed roles and responsibilities. The Lead PIs vita as submitted during pre-application may be used for evaluation or may be updated if desired. For collaborators (including senior key person) who will contribute in a substantial, measurable way to the project (including for subrecipients and consultants), the applicant shall provide a brief vita that lists the following:

- Contact information.
- Education and Training: Undergraduate, graduate, and postdoctoral training. Provide institution, major/area, degree, and year.
- Research and Professional Experience: Beginning with the current position list, in chronological order, professional/academic positions with a brief description.
- Publications: Provide a list of up to 10 publications most closely related to the proposed project. For each publication, identify the names of all authors (in the same sequence in which they appear in the publication), the article title, book or journal title, volume number, page numbers, year of publication, and website address if available electronically.
- Patents, copyrights, and software systems developed may be provided in addition to or substituted for publications.
- Synergistic Activities: List no more than 5 professional and scholarly activities related to the effort proposed.

2-page limit, Name File: 2017 CFA "Last Name of Individual" "Insert ID #.pdf"

Technical expertise and qualifications are to be provided for individual participants, whether the participant is receiving funding or not (including consultants or national laboratory personnel). All participants making a defined, material contribution that is critical to the success of the project must be listed on the application form.

NOTE: This would typically not include the NSUF support staff.

D.7 Benefit of Collaboration

The applicant shall provide a narrative that includes an explanation of the contribution that will be made by the collaborating organizations and/or facilities to be utilized. For R&D applications only, the benefit of collaboration document may be used as submitted during pre-application or updated as desired. Please indicate within this section if the application has benefit or influence on other ongoing or proposed NE R&D projects (e.g., modeling and simulation in one application and effect validation in a separate application).

NSUF Applicants Only: Applications must include a list of publications that resulted from previous NSUF supported projects (publications to be included in the Benefit of Collaboration document).

4-page limit, Name File: 2017 CFA Benefit of Collaboration "Insert ID#.pdf"

D.8 Capabilities

Infrastructure Requirements: The applicant shall identify the infrastructure (e.g., facilities, equipment, instrumentation, and other resources) required to execute the proposed scope of work, including their location, availability, capabilities, and how they will be used in the project. Describe the non-labor (e.g., facilities, equipment, and instrumentation) resources that are available and accessible to the applicant and are required to execute the scope of work. Describe any unique equipment and facilities that are needed, are accessible, and will be used to execute the scope of work. Discuss the adequacy of these resources and identify any gaps and how these will be addressed.

See the electronic application submission form for document guidance. This FOA allows the applicant to propose the purchase of any needed equipment to conduct the proposed work. If you are proposing to purchase equipment, describe comparable equipment, if any, already at your organization and explain why it cannot be used.

2-page limit, Name File: 2017 CFA Capabilities "Insert ID#.pdf"

D.9 Letters of Support (IRPs only)

A letter of support from non-federal, non-academic partners (industry/utility, international) is required to describe the level and type of support (e.g. financial or in-kind contributions) contemplated for the project. Letters of support must be on company stationery and be signed by an authorized company official.

Name File: 2017 CFA Letter of Support "Insert ID#.pdf"

D.10 Budget Documents

D.10.1 SF424 Research and Related (R&R) Lead Budget Form

(TOTAL FED & NON-FED) (Required for all Lead Institutions, not required for NSUF-2 applications)

Complete the Research and Related Budget (Total Fed & Non-Fed) form in accordance with the instructions on the form (Activate Help Mode to see instructions) and the following instructions. You must complete a separate budget for each year of support requested. The form will generate a cumulative budget for the total project period. You must complete all the mandatory information on the form before the **next period** button is activated. You may request funds under any of the categories listed as long as the item and amount are necessary to perform the proposed work, meet all the criteria for allowability under the applicable Federal cost principles, and are not prohibited by the funding restrictions in this announcement (see Part IV, Section H).

NOTE: Do **NOT** lock your cells when saving this document. Applications containing budget forms with **locked cells** may not be evaluated further.

Name File: 2017 CFA Budget "Insert ID #xls"

D.10.2 SF424 R&R Subaward Budget Form

(TOTAL FED & NON-FED) (Required for University and Industry collaborators, not required for NSUF-2 applications)

Budgets for subrecipients, other than DOE FFRDC Contractors. Applicant must provide a separate cumulative SF424 (R&R) budget for each subrecipient that is expected to perform work estimated to be more than $100,000 or 50% of the total work effort (whichever is less). Use up to 10 letters of the subrecipient institution's name as the file name.

NOTE: Do **NOT** lock your cells when saving this document. Applications containing budget forms with LOCKED CELLS may not be evaluated further.

Name File: 2017 CFA Subaward Budget "Insert ID #xls"

D.10.3 Budget for DOE/NNSA Federally Funded Research and Development Center (FFRDC) Contractor

(Required for National Laboratory participants, not required for NSUF-2 applications)

If a DOE/NNSA FFRDC contractor is applying, they must provide a DOE Field Work Proposal in accordance with the requirements in DOE Order 412.1A, Administrative (Admin) Change 1, Work Authorization System dated 05/21/2014. FWPs can be obtained from respective laboratory financial administrators.

FFRDCs are permitted to propose costs in accordance with their established DOE contracts (e.g., overhead, fees, etc.).

Name File: 2017 CFA FWP "Insert ID #.pdf"

D.10.4 Budget Justification

(Required for all university and industry participants, not required for NSUF-2 applications)

Provide the required supporting information for all costs required to accomplish the project, including the following costs (Budget Justification Supporting Documentation): labor; equipment; domestic and foreign travel; participant/trainees; material and supplies; publication; consultant services; automated data processing/computer services; subaward/consortium/contractual; equipment or facility rental/user fees; alterations and renovations; and indirect cost type. Provide any other information you wish to submit to justify your budget request.

If cost sharing is required or voluntarily proposed, provide an explanation of the source, nature, amount, and availability of any proposed cost sharing.

- Third Parties Contributing to Cost Sharing Information (if applicable):

  At the time you submit your application, you must have a letter from each third party (i.e., a party other than the organization submitting the application). The letter must state that the third party is committed to providing a specific minimum dollar amount of cost sharing. By

submitting your application, you are providing assurance that you have signed letters of commitment. In an appendix to your Budget Justification, you must identify the following information for each third party contributing to cost sharing: (1) the name of the organization; (2) the proposed dollar amount to be provided; (3) the amount as a percentage of the total project cost; and (4) the proposed cost sharing - cash, services, or property. This appendix will not count in the project narrative page limitation. Successful applicants must provide the signed letters of commitments within the number of days specified in Part IV.D, Submissions from Successful Applicants.

Name File: 2017 CFA Budget Justification "Insert ID #.pdf"

D.11 Additional Attachments

D.11.1 Current and Pending Support

(Required for all University and Industry Applicants)

As requested by the submission form, PI(s), subrecipients, and other senior/key persons for ongoing and pending applications shall identify all federal funding sources by agency source, project name, monetary amount (total award amounts for entire project period, including indirect costs), and length of term, person-months per year to be devoted to the project by the senior/key persons that are pending or currently in place for the university PI or collaborators within the past five years.

Name File: 2017 CFA Current and Pending Support "Insert ID #.pdf"

D.11.2 Coordination and Management Plan

Multiple PIs: The applicant, whether a single organization or team/partnership/consortium, must indicate if the project will include multiple PIs. This decision is solely the responsibility of the applicant. If multiple PIs will be designated, the application must identify the Contact PI/Project Coordinator and provide a "Coordination and Management Plan" that describes the organization structure of the project as it pertains to the designation of multiple PIs. This plan should, at a minimum, include:

- Process for making decisions on scientific/technical direction
- Publications
- Intellectual property issues
- Communication plans
- Procedures for resolving conflicts
- PIs' roles and administrative, technical, and scientific responsibilities for the project.

Name File: 2017 CFA CMP "Insert ID #.pdf"

D.11.3 Letter of Authorization for DOE/NNSA FFRDCs

(Required for all national laboratory participants listed on the application regardless of funding level or tier)

The cognizant contracting officer for the FFRDC must authorize in writing the use of a DOE/NNSA FFRDC contractor on the proposed project and this authorization must be submitted with the application. The following wording is acceptable for this authorization.

> "Authorization is granted for the Fill-in 1: [Name] Laboratory to participate in the proposed project. The work proposed for the laboratory is consistent with or complimentary to the missions of the laboratory, will not adversely impact execution of the DOE/NNSA assigned programs at the laboratory, and will not place the laboratory in direct competition with the domestic private sector."

NOTE: Individual Letters of Authorization may be submitted or submitted as a blanket permission if all FFRDC/non-FFRDC management has been notified of all submissions and acknowledgment of all participants are identified. Identification of participants by name is to be included in the body or as a separate list.

NOTE: Letter of authorization is not required for NSUF Technical Leads unless the Technical Lead is requesting R&D funding support under this FOA.

Name File: 2017 CFA CO Authorization "Insert ID #.pdf

D.11.4 Project/Performance Site Location(s)

Indicate lead and collaborating site(s) where R&D work will be performed. Note the Project/Performance Site Congressional District is entered in the format of the 2-digit state code, following by the 3-digit Congressional district code (e.g., AA-001).

Name File: 2017 CFA Site Location "Insert ID#.pdf"

D.11.5 Environmental Checklist

Applicants must complete the Environmental Checklist available here. The checklist will not include the NSUF capabilities. Any awards that require the use of government facilities will require a NEPA review performed by the government facility granting the access before physical work can begin.

Name File: 2017 CFA ENV "Insert ID #.pdf"

D.11.6 Certifications and Assurances

(Required for All University and Industry Leads) (Not required for NSUF-2 applications)

Applicants must complete and attach the Certifications and Assurances form found on the DOE Financial Assistance Forms Page at: http://energy.gov/management/downloads/certifications-and-assurances-use-sf-424.

File Name: 2017 CFA Cert & Assurances "Insert ID #.pdf"

Federal and Technical POCs for FY 2017 can be found at:
https://neup.inl.gov/SitePages/FY17_RD_Technical_Program_Contacts.aspx
https://neup.inl.gov/SitePages/FY17_IRP_Technical_Program_Contacts.aspx

Table 2 contains a summary of the required forms/files required for full application submittals.

Table 2. Summary of Full Application Required Forms/Files.

Name of Document	Format	Required From
Conflict-of-Interest	Checkbox	Affirmed by Lead Applicant for all Participants
SF424 (R&R)	Form	All Lead Applicants
Research and Related Other Project Information	Form	All Lead Applicants
Project Summary/Abstract	PDF	All Lead Applicants
Project Narrative	PDF	All Lead Applicants
Other Attachments		
Vitae - Technical Expertise and Qualifications (2 pages each)	PDF	All Leads and Collaborators
Benefits of Collaborations (4 pages)	PDF	All Lead Applicants
Capabilities (2 pages)	PDF	All Lead Applicants
Letters of Support (PD IRPs only)	PDF	IRP Industry/Utility and International Collaborators
SF424 Research and Related (R&R) Lead Budget (Total Fed + Non-Fed)	Form	All Lead Applicants (Except NSUF-2 workscope applicants)
SF424 R&R Subaward Budget (Total Fed + Non-Fed), if applicable	Form	University and Industry Collaborators (Except NSUF-2 workscope applicants)
Budget for DOE National Laboratory Contractor or FFRDC, if applicable	PDF	National Laboratory Leads and Collaborators (Except NSUF-2 workscope applicants)
Budget Justification	PDF	University and Industry Leads and Collaborators (Except NSUF-2 workscope applicants)
Current and Pending Support	PDF	All University and Industry Applicants
Coordination and Management Plan	PDF	Lead Applicant
Authorization for DOE/NNSA FFRDCs	PDF	National Laboratory Applicants (including non-funded collaborators)
Project/Performance Site Location	PDF	All Lead Applicants
Environmental Checklist	Form	All Lead Applicants
Certifications and Assurances	Form	University and Industry Leads (Except NSUF-2 workscope applicants)

E. SUBMISSION FROM SUCCESSFUL APPLICANTS

If selected for award, DOE reserves the right to request additional or clarifying information for any reason deemed necessary including, but not limited to, the following:

- Indirect cost information.
- Other budget information.
- Name and phone number of the Designated Responsible Employee for complying with national policies prohibiting discrimination (See 10 CFR Part 1040.5).
- Representation of Limited Rights Data and Restricted Software, if applicable.
- Commitment Letter from Third Parties Contributing to Cost Sharing, if applicable.

F. SUBMISSION DATES AND TIMES

F.1 NSUF Letter of Intent Due Date

(Mandatory for NSUF Projects)

LOIs for NSUF access are required by August 29, 2016 at 8:00 p.m. Eastern Time (ET). The LOI shall be submitted as required in Part IV, Section C.1.

F.2 R&D/NSUF Pre-Application Due Date

(Mandatory except for IRPs)

Applicants must submit a pre-application by September 14, 2016 at 8:00 p.m. ET. The pre-application shall be submitted as required in Part IV, Section C.2. Applicants who fail to submit a pre-application will be determined non-responsive and ineligible for a comprehensive merit review.

F.3 Integrated Research Projects (IRP) Due Date

IRPs must be received by February 15, 2017 not later than 8:00 p.m. ET. Applicants are encouraged to transmit their applications well before the deadline. Applications received after the deadline will not be reviewed or considered for award.

F.4 Full R&D/NSUF Application Due Date

Full R&D/NSUF applications must be received by February 15, 2017, not later than 8:00 p.m. ET. Applicants are encouraged to transmit their applications well before the deadline. Applications received after the deadline will not be reviewed or considered for award.

G. INTERGOVERNMENTAL REVIEW

This program is not subject to Executive Order 12372, “Intergovernmental Review of Federal Programs.”

H. FUNDING RESTRICTIONS

Funding for all awards and future budget periods is contingent upon the availability of funds appropriated by Congress for the purpose of this program in current and future fiscal years.

H.1 Cost Principles

Costs must be allowable, allocable, and reasonable in accordance with the applicable Federal cost principles referenced in 2 CFR 200, as adopted and amended by 2 CFR 910. The cost principles for "for profit" organizations are in FAR Part 31.

H.2 Pre-Award Costs

Recipients may charge to an award resulting from this announcement pre-award costs that were incurred within the ninety (90) calendar day period immediately preceding the effective date of the award if the costs are allowable in accordance with the applicable Federal cost principles referenced in 2 CFR 200, as adopted and amended by 2 CFR 910. Recipients must obtain the prior approval of the contracting officer for any pre-award costs that are for periods greater than this 90-day calendar period.

Pre-award costs are incurred at the applicant's risk. DOE is under no obligation to reimburse such costs if for any reason the applicant does not receive an award or if the award is made for a lesser amount than the applicant expected.

I. OTHER SUBMISSION AND REGISTRATION REQUIREMENTS

I.1 Where to Submit

NOTE: Submit applications through www.NEUP.gov to be considered for award.

Submit electronic applications through the "Applications" function at www.NEUP.gov. If you have problems completing the registration process or submitting your application, call 208-526-1602 or 208-526-8178 or send an email to NEUP@inl.gov.

I.2 Application Validity Timeframe

By submitting an application in response to this FOA applicants agree that their applications are valid for at least one year from the date set forth for receipt of applications to this FOA. DOE reserves the right (with concurrence of the applicant) to use the submitted application(s) to make additional awards for up to a one year valid time-frame, even after DOE's initial selection announcement has occurred.

PART V – APPLICATION REVIEW INFORMATION

NOTE: The following requirements apply to all FOA areas unless specific requirements are identified.

A. CRITERIA

A.1 Pre-application Review (PS, MS, and NSUF)

Selection of applying institutions invited to provide full applications shall be based on how well the pre-applications meet or exceed the technical and program relevancy and program priority evaluation criteria provided below and as weighted as described in Table 3. All applications submitted under this FOA will be reviewed and scored as described below.

First, a panel of programmatic experts will assess each pre-application's program relevancy and program priority to NE/EM's R&D workscopes. Scores will be assigned according to the following program relevancy and program priority attributes:

A.1.1 Relevancy Attributes

- **High Relevance:** The project is fully supportive of, and has significant, easily recognized and demonstrable ties to mission and the relevant workscope area. The project builds on synergies with ongoing direct- or competitively-funded projects or meets a critical mission need. The project focuses on critical knowledge gaps where limited work is currently being performed.
- **Moderate Relevance:** The project is supportive of, and has significant, recognized and demonstrable ties to mission and the relevant workscope area. The project recognizes synergies with ongoing direct- or competitively-funded projects and identifies areas for improvement to current, or recently completed, work. The project has ties to knowledge gaps where limited work is currently being performed.
- **Some Relevance:** The project is somewhat supportive of, and has some ties to mission and the relevant workscope area. The project recognizes ongoing direct- or competitively-funded projects and identifies limited improvements to current work. The project addresses some knowledge gaps, although there is a moderate amount of work currently being performed in the area.
- **Low Relevance:** The project is minimally supportive of, and has limited ties to mission and the relevant workscope area. The project does not recognize ongoing work and does not identify areas for improvement to current, or recently completed, work. Substantial work is currently being performed in the area to address knowledge gaps.
- **No Relevance:** The project is not supportive of mission or the relevant workscope area.

A.1.2 Program Priority

Application relevancy scores will be weighted in consideration of program priority which is established and influenced by factors such as balance of portfolio, funding constraints, and anticipated program needs. The categories for program priority are listed below:

- **High Program Priority:** The project is critical to program objectives and/or the workscope area and will provide unique results that can be effectively integrated with other currently funded work (direct and/or competitively funded).
- **Moderate Program Priority:** The project is important to program objectives and/or the workscope area and will provide complementary results to currently funded work (direct and/or competitively funded).
- **Low Program Priority:** The project is somewhat important to program objectives and/or the workscope area but results may be duplicative of currently funded work (direct and/or competitively funded) or unnecessary for current program objectives.
- **No Program Priority:** The project is not important to program objectives and/or the workscope area. The project may also be duplicative of ongoing R&D efforts.

Note that the program relevancy score may be increased by up to 5 points based on evaluators' determination of the degree to which an application effectively partners with MSIs, international or industrial partners, and/or underrepresented groups.

Second, a separate technical expert/peer will assess each application on its technical merit. Reviewers will review the technical basis of the application, assigning it a merit category. Applications will then be judged as meeting 'all', 'most', or 'some' expectations for that merit category.

After considering the overall evaluation scores, available funding, and the other selection factors (see Part V, Section A.6) as needed, DOE will make a final determination of applicants who will be invited to provide full applications.

A.1.3 Merit Categories

- **High Merit:** The project unquestionably advances the technical state of knowledge and understanding of the mission or relevant workscope area, and is creative and based largely on original concepts. The scope can be executed fully in the facilities available.
- **Moderate Merit:** The project advances the technical state of knowledge and understanding of the mission or relevant workscope area, and is based on some established concepts, although several creative and original concepts are presented. The scope may be executed fully in the facilities available.
- **Some Merit:** The project incrementally advances the technical state of knowledge and understanding of the mission or relevant workscope area, and is based predominately on established concepts, with some creative, original concepts. The scope may be difficult to execute fully in the facilities available.
- **Low Merit:** The project recognizes the technical state of knowledge and understanding of the mission or relevant workscope area, and is only marginally creative and contains few original concepts. The scope will require resources not named in the project or will require additional facilities or resources to execute.
- **No Merit:** The project does not advance or recognize the technical state of knowledge and understanding of the mission or relevant workscope area, and is not creative or original. The scope cannot be executed fully in the facilities available.

The individual scores determined by evaluating each application against the above criteria will then be weighted as defined in Table 3 to determine an overall evaluation score for each application.

Applicants who are not specifically invited to submit full applications may still do so at their own risk. There is no guarantee uninvited full applications will receive a full review; however, all full applications will be re-reviewed for program relevancy/priority. Only those uninvited full applications scored as "High Relevance" and at least "Moderate Program Priority" will be forwarded for technical peer review during the evaluation phase for full applications described below.

A.2 Feasibility Review (NSUF Projects Only)

The feasibility review is a very important part of the NSUF pre-application review process. Many factors will be taken into account as part of the feasibility review including type of project, duration of project, experimental degree of complexity, types of samples, number of samples, needed shipping and containment, potential needed capability or facility enhancement or upgrade, project schedule, and cost. In order to ensure that a pre-application and eventual application is submitted with the highest possible degree of feasibility, it is imperative that potential proposers establish contact with an NSUF Technical Lead at the earliest possible time. The NSUF Technical Lead will have knowledge of and direct access to the facility or facilities where the work will be performed. It is intended that the Technical Lead should be an integral collaborator on the project and contribute strongly to the application preparation. The Technical Lead will provide guidance in establishing the scope of the project in negotiation with the facility to produce a cost estimate. Should the project be awarded, the Technical Lead will be the primary POC to best ensure the project is performed on schedule and within budget.

Applications deemed not feasible by the NSUF Program Office will not be considered.

A.3 Initial Review Criteria of Full Application

Prior to a comprehensive merit evaluation, DOE will perform an initial review to determine that (1) the applicant is eligible for an award; (2) the named PI(s) and collaborators have not changed from the pre-application to the full application or, if they have, DOE's Contracting Officer has provided signed approval; (3) the information required by the announcement has been submitted; and (4) all mandatory requirements are satisfied. Only applications meeting these initial review criteria will be considered during the merit review and award selection decision.

A.4 PS/MS/NSUF R&D Merit Review Criteria: Full Applications

Selection will be made in accordance with the review criteria identified for each area and the program policy factors (other selection factors) listed in Part V, Section A.6 of this FOA. The criteria for the respective FOA areas are identified below along with the relative importance of each criterion or sub-criterion, if applicable. All applications will be point scored and ranked. Applications must be fully responsive to each of the following criteria.

Review of full applications shall be based on how well the applications meet or exceed the technical and program relevancy/priority evaluation criteria provided below and as weighted as described in Table 3. All invited full applications submitted under this FOA will be reviewed and

scored as described in this FOA. A panel of programmatic experts will assess each full application's program relevancy/ priority to NE's R&D mission and workscope area and multiple technical peer reviewers will evaluate the project for technical merit. Effective partnerships will be incorporated into the program relevancy/priority evaluation.

A.4.1 Program Relevancy/Priority Attributes

Same criteria used for PS/MS/NSUF pre-application evaluation phase applies to full applications. See Part V, Section A.1.

A.4.2 Technical Merit Attributes

Applications will be subjected to formal merit review and will be evaluated against the following criteria.

- **Criterion 1 – Advances the State of Scientific Knowledge and Understanding and Addresses Gaps in Nuclear Science and Engineering Research**: The technical merit of the proposed R&D project will be evaluated, including the extent to which the project advances the state of scientific knowledge and understanding and addresses gaps in nuclear science and engineering research. Evaluation will consider how important the proposed project is to advancing knowledge and understanding within the area selected and how well the proposed project advances, discovers, or explores creative, original, or potentially transformative concepts.
- **Criterion 2 – Technical Quality of the Proposed R&D Project**: DOE will evaluate the overall quality/acceptability of the proposed R&D project. In evaluating this criterion, DOE may consider the (1) merit, feasibility, and realism of the proposed methodology and approach to the project; (2) schedule, including sequence of project tasks, principle milestones, and times for each task; (3) planned assignment of responsibilities; (4) proposed project efficiencies; and (5) technical expertise available to the applicant in carrying out the project.
- **Criterion 3 – Applicant Team Capabilities, Risks, and Experience**: The extent to which the applicant team provides objective evidence that it has the resources and abilities to successfully complete the R&D project in a technically defensible manner will be evaluated. Current activities, relevance and depth of the organization's experience and capabilities, together with that of the PI, and the adequacy of the requested resources and their supporting justification will all be evaluated as they relate to the likely successful completion of the R&D objectives.

  In evaluating this criterion, DOE will consider the extent to which the application demonstrates the following:

  - That the capabilities and qualifications of engineering and scientific personnel, PI, and other key contributors are such that they can successfully accomplish the technical scope of the proposed project.
  - That the applicant or respective team members have demonstrated successful experience/past performance, knowledge, and understanding of the business and regulatory requirements for projects of similar size, scope, and complexity in achieving

project technical success on time with no significant, unresolved safety and quality issues.

- The applicant team's identification of and work with industry to gain industry perspective and technical knowledge important to project decisions, and how the applicant will work with industry to best achieve the objectives of this FOA and the project.

Table 3. PS/MS R&D and NSUF Access Only Pre-applications and Full Applications - Weighting of Evaluation Scores.

Criterion	
Technical Application – Peer Review	Percentage of Peer Review Score
Pre-Applications	
Technical Merit Category	100%
Full Applications	
Criterion 1: Advances the State of Scientific Knowledge and Understanding and Addresses Gaps in Nuclear Science and Engineering Research	35%
Criterion 2: Technical Quality of the Proposed R&D Project	35%
Criterion 3: Applicant Team Capabilities, Risks, and Experience	30%
Peer Review Score	Sum of ratings x weights
Program Relevance/Priority[1] (Separate Review Process, Used for Both Pre-Applications and Full Applications)	Percentage of Program Relevancy/Priority Review Score
Relevancy	100%
Program Priority	Multiplier based on program priority rating
Diverse Partnerships	Up to 5 points, not to exceed the maximum relevancy points available.
Program Relevancy/Priority Score	Sum of ratings[2] x program priority multiplier
Weighting	Weighted Score Ratio (Peer : Relevancy) Program Supporting: 65:35 Mission Supporting: 80:20 NSUF Access Only: 65:35

[1] Supports Program Relevance: This element will be scored by the Program Offices, not by peer review.

[2] Total program relevancy/priority points cannot exceed 100% of points available from the program relevancy/priority criteria.

A.5 Program Directed (IRP) Merit Review for Full Application

Selection for the PD IRP for U.S. university-led projects will be based on the following criteria and sub-criteria. The criteria are equally important. Review of full applications shall be based on how well the applications meet or exceed the technical and program relevancy/priority evaluation criteria provided below and as weighted as described in Table 4.

A.5.1 Relevancy Attributes

- **Program Factors:** Relation of the proposed project to the core research activities within the DOE programs
- **Resource Factors:** The degree to which award of the project optimizes use of the proposed resources to achieve project goals.
- **Collaboration Factors:** Potential for developing synergies between the proposed IRP and other DOE research activities
- **Diverse Partnerships:** The degree to which MSIs, international and/or industry partners, and/or underrepresented groups, if any, contribute to the project's ability to support the relevant program element or overall mission.

NOTE: Diverse partnerships are not required for projects to be evaluated as unquestionably relevant, but diverse partnerships will increase the relevance score by 1 to 5 points, not to exceed the maximum available relevancy points, based on meeting one of the following criteria: the project has (1) a substantive contribution by an industrial, international, underrepresented group, or MSI as lead or collaborator; (2) a demonstrable contribution by an industrial, international, underrepresented group, or MSI as lead or collaborator; or (3) some relevant partnership with an industrial, international, underrepresented group, or MSI as lead or collaborator.

A.5.2 Technical Merit Attributes

- **Criterion 1 – Scientific and/or Technical Merit of the Project**: The scientific and technical merit of the proposed IRP will be evaluated, including the extent to which the project advances the state of scientific knowledge and understanding relative to the IRP and addresses key scientific challenges and shifts in research directions towards promising developments. Evaluations will consider how important the proposed project presents a balanced and comprehensive program of research that, as needed, supports experimental, theoretical, and computational efforts and develops new approaches in these areas.
- **Criterion 2 – Appropriateness of the Proposed Method or Approach**: The appropriateness of the proposed IRP method or approach will be evaluated, including risk posed by the approach, as well as the extent to which the strategy and plan for the development and operation of the proposed IRP identifies an acceptable approach involving senior/key personnel, the means for achieving integration on the IRP, and plans for leadership and guidance for the scientific and technical direction. DOE shall consider whether the applicant presents a comprehensive management plan for a world-class program that encourages research—including high-risk, high-reward—as well as synergisms among investigators. The organization structure should delineate the roles and responsibilities of senior/key personnel and describes the means of providing external oversight and guidance

for scientific and technical direction and approval of the research program. Additionally, DOE will also consider the following:

- The applicant's plans (if any) for education, outreach, and training in the proposed IRP are appropriate and, if needed, described as part of the scope.
- Appropriateness and reasonableness of applicant's plans (if any) for external collaborations and partnerships.
- The roles and intellectual contributions of the IRP lead PI, other investigator(s), and each senior/key person.
- Maximizing the use of other available facilities and existing equipment.
- Relation to existing and planned research programs at the host or collaborator institution.

• **Criterion 3 – Applicant Team Capabilities, Risks, and Experience**: DOE will evaluate the extent to which the applicant team provides objective evidence that it has, or can obtain the professional resources and abilities to successfully complete the IRP project in a technically defensible manner. Current activities, relevance and depth of the organization's experience and capabilities, together with that of the PI, will be evaluated as it relates to the likely successful completion of the IRP. Risk posed by the applicant team will be evaluated. In evaluating this criterion, DOE will consider the extent to which the application demonstrates the following:

- The applicant's senior/key personnel have a proven record of research in the disciplines needed for success in the project.
- The proposed access to existing research space, instrumentation, and facilities at the host institutions and its partners are likely to meet the needs of the proposed IRP.
- There is adequate access to experimental and computational capabilities as needed to ensure successful completion of the proposed research.
- The lead institution and the senior/key personnel for the IRP have proven records of success in project, program, and personnel management for projects of comparable magnitude.
- The plan for recruiting any additional scientific and technical personnel including new senior staff, students, and postdocs is reasonable and appropriate.
- The IRP leadership has the capability to communicate effectively with scientists of all required disciplines.
- The IRP lead PI and senior/key personnel will be adequately involved in the proposed IRP, particularly taking into account their potential involvement in other major projects.

Table 4. PD IRP Full Applications - Weighting of Evaluation Scores.

Criterion	
Technical Application – Peer Review	Percentage of Peer Review Score
Criterion 1: Scientific and/or Technical Merit of the Project	35%
Criterion 2: Appropriateness of the Proposed Method or Approach	35%
Criterion 3: Applicant Team Capabilities, Risk, and Experience	30%
Peer Review Score	Sum of ratings x weights
Relevance[1] (Separate Review Process)	Percentage of Relevancy Review Score
Program Factors	40%
Resource Factors	40%
Collaboration Factors	20%
Diverse Partnerships	Up to 5 points, not to exceed the maximum relevancy points available.
Relevancy Score	Sum of ratings[2] x weights
Weighting	Weighted Score Ratio (Peer : Relevancy) PD 50:50

[1] Supports Program Relevance: This element will be scored by the Federal Program and Technical Integration Offices, not by peer review.

[2] Total relevancy points cannot exceed 100% of points available from the relevancy criteria.

A.6 Other Selection Factors

Program Policy Factors. The Selection Official may consider the following program policy factors in the selection process:

- Degree to which proposed project optimizes/balances/maximizes use of available DOE funding to achieve DOE program goals and objectives. This includes how those R&D and IRP projects support DOE research; it may also include research portfolio diversity, geographic distribution and/or how the projects support other complementary efforts which, when taken together, will best achieve program research goals and objectives.
- Application selection may optimize appropriate mix of projects to best achieve DOE research goals objectives.
- Cost/Budget considerations, including availability of funding.

The demonstrated ability of the applicant to successfully complete projects (including relevant prior projects) and do so within budget and within the specified timeframe of the award. This

includes the extent that applicant has awards in progress, or not completed, from DOE, from a previous year's FOA, or has existing no cost extensions.

Any of the above factors may be independently considered by the Selection Official in determining the optimum mix of applications that will be selected for support. These factors, while not indicators of the application's merit, may be essential to the process of selecting the application(s) that, individually or collectively, will best achieve the program objectives. Such factors are often beyond the control of the applicant. **Applicants should recognize that some very good applications might not receive an award because of program priorities and available funding.** Therefore, the above factors may be used by the Selection Official to assist in determining which applications shall receive DOE funding support.

For applications requesting R&D support with NSUF access, DOE reserves the right to decouple the R&D element from the NSUF access element and consider either portion for a provisional award dependent on confirmation from the applicant that the portion selected for award can be executed independently.

B. SUMMARY OF THE REVIEW AND SELECTION PROCESS

B.1 PS/MS/NSUF Pre-applications

Pre-application projects will be evaluated against the technical and program relevancy/priority criteria described in this FOA. This peer and program evaluation process will produce a list of recommended projects for each workscope provided in Appendices A through C. DOE will consider the overall evaluation results and subjective programmatic factors to select a final set of projects to be "invited" to provide a full application.

NOTE: Applicants not requesting NSUF access who do not receive a formal invitation from DOE to submit full applications in response to the pre-application review process may still do so at their own risk. There is no guarantee uninvited full applications will receive a full review; however, all full applications received will be re-reviewed for program relevancy/priority. Only uninvited full applications scored as "High Relevance" and at least "Moderate Program Priority" will receive a technical peer review during the evaluation phase for full applications.

Applicants requesting NSUF access who are not specifically invited by DOE to submit full applications will NOT be allowed to submit full applications. Due to resource limitations within the NSUF, the feasibility review, a critical element of NSUF access, will continue only for applications that are specifically invited. An uninvited NSUF application without a complete NSUF feasibility review is incomplete and cannot be re-reviewed for program relevancy/priority.

B.2 PS/MS/NSUF Full Applications

Multiple peer reviewers will independently employ a semi-blind process to evaluate the applications in accordance with the technical review evaluation criteria described in this FOA. Also, DOE will complete a program relevancy/priority review process in accordance with the criteria described above. These results will be weighted in accordance with the ratio described above. DOE will consider the overall evaluation results and subjective programmatic factors to ultimately recommend a final set of applications for approval by the Selection Official.

B.3 IRP Full Applications

Multiple technical experts independently evaluate the applications in accordance with the review criteria and weighted as described above. Also, DOE will complete a program/relevancy review process in accordance with the criteria described above. Following individual review, reviewers meet as a panel for final recommendation to DOE. DOE will consider the overall evaluation results and subjective programmatic factors to ultimately recommend applications for approval by the Selection Official.

B.4 Selection Official Considerations

The Selection Official will consider the merit review recommendations, subjective factors such as program policy considerations, and the amount of funds available to make final project selections.

C. ANTICIPATED NOTICE OF SELECTION

DOE anticipates making selection announcements no later than July 31, 2017.

PART VI – AWARD ADMINISTRATION INFORMATION

A. AWARD NOTICES

A.1 Notice of Selection

DOE will notify applicants selected for award. This notice of selection is not an authorization to begin performance. (See Part IV, Section H with respect to the allowability of pre-award costs.)

Organizations whose applications have not been selected will be advised as promptly as possible. This notice will explain why the application was not selected.

A.2 Nondisclosure and Confidentiality Agreements Representations

In submitting an application in response to this FOA the applicant represents that it will not require its employees or contractors seeking to report fraud, waste, or abuse to sign internal nondisclosure or confidentiality agreements or statements prohibiting or otherwise restricting such employees or contactors from lawfully reporting such waste, fraud, or abuse to a designated investigative or law enforcement representative of a Federal department or agency authorized to receive such information.

A.3 Notice of Award

An assistance agreement issued by the Contracting Officer is the authorizing award document (excludes NSUF access only awards). It normally includes, either as an attachment or by reference, the following: (1) special terms and conditions; (2) applicable program regulations, if any; (3) application as approved by DOE; (4) DOE assistance regulations at 2 CFR part 200, as amended by 2 CFR 910; (5) National Policy Assurances To Be Incorporated As Award Terms; (6) Budget Summary; and (7) Federal Assistance Reporting Checklist, which identifies the reporting requirements.

Grants and cooperative agreements made to universities, non-profits, and other entities subject to Title 2 CFR are subject to the Research Terms and Conditions located on the National Science Foundation website at http://www.nsf.gov/bfa/dias/policy/rtc/index.jsp.

If award is made to a DOE national laboratory, it will be made against their existing prime contract with the DOE through the work authorization system as outlined in DOE O 412.1A, Admin Change 1. DOE O 481.1C., Work for Others, is not applicable. DOE national laboratories remain bound by the terms and conditions of their contract with DOE.

B. ADMINISTRATIVE AND NATIONAL POLICY REQUIREMENTS

B.1 Administrative Requirements

The administrative requirements for DOE grants and cooperative agreements are contained in 2 CFR 200, as amended by 2 CFR 910 (See: http://ecfr.gov). Grants and cooperative agreements made to universities, non-profits, and other entities subject to Title 2 CFR are subject to the Research Terms and Conditions located on the National Science Foundation website at http://www.nsf.gov/bfa/dias/policy/rtc/index.jsp.

B.1.1 DUNS and SAM Requirements

Additional administrative requirements for DOE grants and cooperative agreements are contained in 2 CFR, Part 25 (see http://www.ecfr.gov/cgi-bin/ECFR?page=browse). Prime awardees must keep their data at System for Award Management (SAM) current. Subawardees at all tiers must obtain Data Universal Numbering System (DUNS) numbers and provide the DUNS to the prime awardee before the subaward can be issued.

B.1.2 Subaward and Executive Reporting

Additional administrative requirements necessary for DOE grants and cooperative agreements to comply with the Federal Funding and Transparency Act of 2006 (FFATA) are contained in 2 CFR, Part 170 (see http://www.ecfr.gov/cgi-bin/ECFR?page=browse). Prime awardees must register with the new FFATA Subaward Reporting System (FSRS) database and report the required data on their first tier subawardees. Prime awardees must report the executive compensation for their own executives as part of their registration profile in the SAM.

B.2 Special Terms and Conditions and National Policy Requirements

The DOE special terms and conditions for use in most grants and cooperative agreements are located at http://energy.gov/management/office-management/operational-management/financial-assistance/financial-assistance-forms under Award Terms.

The National Policy assurances to be incorporated as award terms are located at http://www.nsf.gov/bfa/dias/policy/rtc/appc.pdf and at http://energy.gov/management/office-management/operational-management/financial-assistance/financial-assistance-forms under Award Terms.

Quality Assurance to be incorporated as award terms (applicable to educational institutions only).

While DOE will normally rely on the institution's quality assurance (QA) system, below are general guidelines that those systems should adhere to, as applicable, for the type of work being done. No separate deliverable is required by this provision, unless the institution's existing QA systems are not compliant with these guidelines, or in the case that the institution identifies that the work to be performed has any special or unique QA requirements. The DOE has the right of access to the university facilities and records for surveillance or inspection. Any surveillance or inspections will be coordinated with the university researcher.

- **Test Planning, Implementation, and Documentation (Research Planning)**
  - Test methods and characteristics shall be planned and documented, and the approaches and procedures recorded and evaluated. Characteristics to be tested and test methods shall be specified. The test results shall be documented and their conformance to acceptance criteria evaluated.
  - Documentation shall be developed to ensure replication of the work. The researcher/developer shall document work methods and results in a complete and accurate manner. The level of documentation shall be sufficient to withstand a successful

peer review. Protocols on generation and safeguarding of data and process development from research shall be developed for consistency of R&D work.

- Laboratory notebooks shall be controlled by a university documented procedure/process. Also, the process for development of intellectual property documentation shall be controlled under university document control procedures/processes.

  If the university identifies any special or unique QA requirements for Test Planning, Implementation, and Documentation, the university shall submit a Test Plan/Research Plan to the funding organization for review and concurrence prior to use if requested.

- **Equipment Calibration and Documentation**

  The researcher shall specify the requirements of accuracy, precision, and repeatability of measuring and test equipment (M&TE). Depending upon the need for accuracy, precision, and repeatability of M&TE used in research, standard university documented procedures shall be implemented. During the process development stage and for all R&D support activities, M&TE shall be controlled. The degree of control shall be dependent on the application of the measurement. The university shall have available calibration records documenting instrument calibration to a national standard.

- **Procurement Document Control**

  University documented procurement document control procedures/processes shall be implemented if results of initial research work are expected in the next stage of work, and if the pedigree of materials being used could influence the usefulness of the research work results. Procurement document specifications shall be controlled. For development and support activities, the level of procurement document control shall be applied to support a design basis, i.e., engineering design system criteria. If procurement document control requirements apply, the university shall have a documented procedure/process for control of suspect/counterfeit items (S/CI), and have available for submission for DOE review material pedigree records.

- **Training and Personnel Qualification**

  Personnel performing research activities shall be trained per university documented requirements to ensure work is being conducted properly to prevent rework or the production of unacceptable data. The university shall have available—for submission for DOE review—personnel training records.

- **Records**

  In many cases, the notebook or journal of the researcher is the QA record. These documents shall be controlled in accordance with university documented procedure/process, e.g., maintain notebook as a controlled document, maintain copies of critical pages or access-controlled filing when not in use to preserve process repeatability and the QA record. Electronic media may be used to record data and shall be subject to documented administrative controls for handling and storage of data. Work activity records shall be maintained by the university and available for DOE review, upon request, within 60 days of completion of the work scope.

- **Data Acquisition/Collection and Analysis**

  When gathering data, the researcher shall ensure that the systems and subsystems of the experiment are operating properly. Software systems used to collect data and operate the experiment requires verification that it meets functional requirements prior to collection of actual data. Data anomalies require investigation. When performing data analysis, define (1) assumptions and the methods used; (2) the results obtained so that independent qualified experts can evaluate how data was interpreted;(3) methods used to identify and minimize measurement uncertainty; (4) the analytical models used; and (5) whether the R&D results have been documented adequately and can be validated.

- **Peer Review**

  Peer reviews shall be performed in accordance with journal peer review requirements. The peer reviews shall be documented and maintained by the university. Peer review documentation and results shall be provided to DOE, if requested.

B.3 Intellectual Property Provisions

The standard DOE financial assistance intellectual property provisions applicable to the various types of recipients are located at http://energy.gov/gc/standard-intellectual-property-ip-provisions-financial-assistance-awards.

B.4 Lobby Restrictions

By accepting funds under this award, you agree that none of the funds obligated on the award shall be expended, directly or indirectly, to influence congressional action on any legislation or appropriation matters pending before Congress, other than to communicate to Members of Congress as described in 18 U.S.C. 1913. This restriction is in addition to those prescribed elsewhere in statute and regulation.

B.5 Corporate Felony Conviction and Federal Tax Liability Representations

In submitting an application in response to this FOA the applicant represents that:

- It is not a corporation that has been convicted (or had an officer or agent of such corporation acting on behalf of the corporation convicted) of a felony criminal violation under any Federal law within the preceding 24 months.
- No officer or agent of the corporation has been convicted of a felony criminal violation for an offense arising out of actions for or on behalf of the corporation under Federal law in the past 24 months.
- It is not a corporation that has any unpaid Federal tax liability that has been assessed, for which all judicial and administrative remedies have been exhausted or have lapsed, and that is not being paid in a timely manner pursuant to an agreement with the authority responsible for collecting the tax liability.

  For purposes of these representations the following definitions apply:

  A Corporation includes any entity that has filed articles of incorporation in any of the 50 states, the District of Columbia, or the various territories of the United States (but not foreign corporations). It includes both for-profit and non-profit organizations.

B.6 Statement of Substantial Involvement

DOE anticipates having substantial involvement during the project period, through technical assistance, advice, intervention, integration with other awardees performing related activities, and technical transfer activities. The recipient's responsibilities are listed in paragraph b and DOE's responsibilities are listed in paragraph c:

- Recipient's responsibilities. The recipient is responsible for:
  - Complying with all award requirements, including performing the activities supported by this award, including providing the required personnel, facilities, equipment, supplies and services;
  - Defining approaches and plans as may be required by this award, submitting the plans to DOE for review, and incorporating DOE's comments;
  - Managing and conducting the project activities, including coordinating with DOE management and operating (M&O) contractor(s) as required and as proposed in the recipient's project plan on activities performed under the M&O contract(s) that are related to the project;
  - If requested by the program, attend annual program review meetings and reporting project status;
  - Submitting technical reports as stated in the Federal Assistance Reporting Checklist, and incorporating DOE comments;
  - **DOE-NE Program Information Collection System (PICS:NE):** NE CINR R&D award PIs are required to complete reporting requirements as outlined in the instructions provided in the awards Attachment B "Federal Assistance Reporting Checklist and Instructions". Information provided in required award reporting will be utilized to populate PICS:NE (PICS:NE data entry will be done by DOE using information provided by the PI). PIs may be asked by the DOE PICS:NE representative for additional information during the initial work package setup process to accurately document the project plan, as well as through the award's project period to populate information in PICS:NE. PIs may be requested to provide additional assistance for clarification purposes in assuring accuracy of the information being entered into PICS:NE.
  - **DOE-NE Program Accrual Information:** DOE policy requires the monthly tracking of uncosted obligations on financial assistance awards in the DOE accounting system to assist DOE in accomplishing more accurate project management and to more accurately recognize Department liabilities to the recipient. DOE personnel do this internally by subtracting paid costs and any costs accrued (yet to be paid incurred costs of the recipient) from the amounts obligated on the financial assistance award. In accomplishing this, DOE may request the recipient provide additional cost accrual information to accurately estimate/document the accrual in the DOE accounting system. If such information is needed, it will typically be done on awards over $1M and DOE will normally do this using an e-mail to the recipient requesting the recipient identify the dollar value of work it has performed each month but not yet invoiced (or done a Treasury system draw on) as of month end. Recipients will cooperate with DOE in providing the needed cost accrual information.

- DOE responsibilities. DOE is responsible for:
  - Reviewing in a timely manner project plans, including technology transfer plans, and redirecting the work effort if the plans do not address critical programmatic issues;
  - Conducting annual program review meetings to ensure adequate progress and that the work accomplishes the program and project activities. Redirecting work or shifting work emphasis, if needed;
  - Promoting and facilitating technology transfer activities, including disseminating program results through presentations and publications; and
  - Serving as scientific/technical liaison between awardees and other program or industry staff. There are limitations on recipient and DOE responsibilities and authorities in the performance of the project activities. Performance of the project activities must be within the scope of the Statement of Objectives, the terms and conditions of the Cooperative Agreement, and the funding and schedule constraints.

C. REPORTING

Reporting requirements are identified on the Federal Assistance Reporting Checklist, DOE F 4600.2, attached to the award agreement. A sample checklist is available at http://energy.gov/management/office-management/operational-management/financial-assistance/financial-assistance-forms under Award Forms.

PART VII – QUESTIONS/AGENCY CONTACTS

A. QUESTIONS

Questions regarding the content of this CINR FOA must be submitted to the Agency Contact listed in Part VII, Section B. Questions regarding workscopes may be submitted to the DOE federal and technical POCs listed in Appendices A, B, and C. PIs are not allowed to contact Federal or Technical Points of Contact after the full application due date with the exception of discussion supporting NSUF feasibility assessments. Answers to questions submitted that contain information about the FOA or the FOA process that would be necessary for the preparation of applications will be posted at the www.grants.gov and www.FedConnect.net websites with a courtesy posting to www.NEUP.gov as soon as practical. Information provided to a potential applicant in response to its request will not be disclosed if doing so would reveal the potential applicant's confidential business strategy and/or is otherwise protected. DOE will try to respond to a question within three (3) business days, unless a similar question and answer have already been posted on the website.

Interested parties are encouraged to ask Q&A as early in FOA process as possible. Questions and comments concerning this FOA shall be submitted not later than five (5) business days prior to the application due date. Questions submitted after that date may not allow the Government sufficient time to respond.

Questions relating to the registration process, system requirements, how an application form works, or the submittal process must be directed to NEUP@inl.gov.

B. AGENCY CONTACT

Name: Mr. Shawn Tinsley
E-mail: tinslesm@id.doe.gov

C. INFORMATIONAL WEBINAR

DOE holds a webinar each year to discuss the structure and execution of this FOA, including major updates from previous years, including workscopes. Applicants can watch and participate in the live webinars and submit questions to be answered in real time. All webinar presentations are recorded and posted on www.NEUP.gov for review by applicants.

PART VIII – OTHER INFORMATION

A. MODIFICATIONS

Notices of any modifications to this announcement will be posted on www.FedConnect.net and www.Grants.gov and will also be posted as a courtesy on www.NEUP.gov. It is recommended that you check the www.NEUP.gov site frequently to ensure you receive timely notice of any modifications or other announcements.

B. GOVERNMENT RIGHT TO REJECT OR NEGOTIATE

DOE reserves the right, without qualification, to reject any or all applications received in response to this announcement and to select any application, in whole or in part, as a basis for negotiation and/or award.

C. COMMITMENT OF PUBLIC FUNDS

The Contracting Officer is the only individual who can make awards or commit the Government to the expenditure of public funds. A commitment by anyone other than the Contracting Officer, either explicit or implied, is invalid.

Funding for all awards is contingent upon the availability of funds appropriated by Congress for the purpose of this program.

D. PROPRIETARY APPLICATION INFORMATION

Patentable ideas, trade secrets, proprietary or confidential commercial or financial information, disclosure of which may harm the applicant, should be included in an application only when such information is necessary to convey an understanding of the proposed project. The use and disclosure of such data may be restricted, provided the applicant includes the following legend on the first page of the project narrative and specifies the pages of the application which are to be restricted:

> "The data contained in pages [Insert pages] of this application have been submitted in confidence and contain trade secrets or proprietary information, and such data shall be used or disclosed only for evaluation purposes, provided that if this applicant receives an award as a result of or in connection with the submission of this application, DOE shall have the right to use or disclose the data herein to the extent provided in the award. This restriction does not limit the government's right to use or disclose data obtained without restriction from any source, including the applicant."

To protect such data, each line or paragraph on the pages containing such data must be specifically identified and marked with a legend similar to the following:

> "The following contains proprietary information that (name of applicant) requests not be released to persons outside the Government, except for purposes of review and evaluation."

E. EVALUATION AND ADMINISTRATION BY NON-FEDERAL PERSONNEL

In conducting the merit review evaluation, the Government may seek the advice of qualified non Federal personnel as reviewers. The Government may also use non-Federal personnel to conduct routine, nondiscretionary administrative activities. The applicant, by submitting an application, consents to the use of non-Federal reviewers/administrators. Non-Federal reviewers must sign COI and non-disclosure agreements prior to reviewing an application. Non-Federal personnel conducting administrative activities must sign a non-disclosure agreement.

F. INTELLECTUAL PROPERTY DEVELOPED UNDER THIS PROGRAM

Patent Rights. The government will have certain statutory rights in an invention that is conceived or first actually reduced to practice under a DOE award. 42 U.S.C. 5908 provides that title to such inventions vests in the United States, except where 35 U.S.C. 202 provides otherwise for nonprofit organizations or small business firms. However, the Secretary of Energy may waive all or any part of the rights of the United States subject to certain conditions. (See "Notice of Right to Request Patent Waiver" in Section F below.)

Rights in Technical Data. Normally, the government has unlimited rights in technical data created under a DOE agreement. Delivery or third party licensing of proprietary software or data developed solely at private expense will not normally be required except as specifically negotiated in a particular agreement to satisfy DOE's own needs or to insure the commercialization of technology developed under a DOE agreement.

Special Protected Data Statutes. This program is covered by a special protected data statute. These special protected data statutes apply to only those applicants who cost share. The provisions of the statute provide for the protection from public disclosure, for a period of up to five (5) years from the development of the information, of data that would be trade secret, or commercial or financial information that is privileged or confidential, if the information had been obtained from a non-Federal party. Generally, the provision entitled, Rights in Data - Programs Covered Under Special Protected Data Statutes (Item 4 under 2 CFR 910, Appendix A to Subpart D), would apply to an award made under this announcement. This provision will identify data or categories of data first produced in the performance of the award that will be made available to the public, notwithstanding the statutory authority to withhold data from public dissemination, and will also identify data that will be recognized by the parties as protected data.

G. NOTICE OF RIGHT TO REQUEST PATENT WAIVER

Applicants may request a waiver of all or any part of the rights of the United States in inventions conceived or first actually reduced to practice in performance of an agreement as a result of this announcement, in advance of or within 30 days after the effective date of the award. Even if an advance waiver is not requested or the request is denied, the recipient will have a continuing right under the award to request a waiver of the rights of the United States in identified inventions, i.e., individual inventions conceived or first actually reduced to practice in performance of the award. Any patent waiver that may be granted is subject to certain terms and conditions in 10 CFR 784 at http://energy.gov/gc/services/technology-transfer-and-procurement/office-assistant-general-counsel-technology-transf-1 under the Patent Waivers.

Domestic small businesses and domestic nonprofit organizations will receive the patent rights clause at 37 CFR 401.14, i.e., the implementation of the Bayh-Dole Act. This clause permits domestic small business and domestic nonprofit organizations to retain title to subject inventions. Therefore, small businesses and nonprofit organizations do not need to request a waiver.

H. UNDERSTANDING COST SHARING REQUIREMENTS (not required for Universities and FFRDCs)

Department-wide cost sharing requirements are established by Section 988 of the Energy Policy Act of 2005. The DOE Financial Assistance Rules at 2 CFR 200 and 2 CFR 910 implement cost sharing requirements (see 2 CFR 200.306 and 2 CFR 910.130). The FOA requires a minimum of 20% cost sharing by awardees, except for applications led by U.S. non-profit educational institutions/universities. The applicant's cost share requirement will be based on the total cost of the project. FFRDC costs are included as part of government cost share.

In accordance with section 988 (d), Calculation of Amount, when calculating the amount of the non-Federal contribution, the Government:

1. May include the following costs as allowable in accordance with the applicable cost principles:
   a. Cash.
   b. Personnel costs.
   c. The value of a service, other resource, or third party in-kind contribution determined in accordance with the applicable circular of the Office of Management and Budget [**Note**: In-kind contributions, like any other cost, need to be incurred during the award project period, e.g., cannot give credit for costs incurred prior to the award, including prior development costs, unless otherwise authorized by the applicable cost principles].
   d. Indirect costs or facilities and administrative costs.
   e. Any funds received under the power program of the Tennessee Valley Authority (except to the extent that such funds are made available under an annual appropriation act).

Shall not include:

   a. Revenues or royalties from the prospective operation of an activity beyond the time considered in the award.
   b. Proceeds from the prospective sale of an asset of an activity.
   c. Other appropriated Federal funds.

The terms and conditions of the cooperative agreement will include appropriate provisions on allowable costs.

The Federal share shall not be required to be repaid as a condition of award. Royalties should not be used to repay or recover the Federal share, but may be used as a reward for technology transfer activities.

Cost share is often confused with some form of cost matching. The key to understanding how cost share works is to understand the base from which the cost share percentage is calculated.

Cost share percentage is a percentage of the total allowable costs of the project. Note that it is NOT a percentage of the DOE funds, but rather the entire project, including all awardee funds, DOE funds, and all FFRDC requirements.

When determining the cost share requirement in dollars, it is first necessary to determine the entire project cost. Initially, no consideration would be given as to where the funds would come from. An applicant would determine that a certain cost (e.g., hours, travel, supplies, etc.) would be needed to complete the project as proposed in the application. Once the project cost is determined, an applicant can then calculate the cost share requirement by multiplying the cost share percentage by the project cost. The resulting dollar figure would be the dollar requirement that the applicant must provide as cost share.

Below are several examples of how the cost share amount would be calculated:

Example 1

The applicant determines that the following budget requirements are needed to carry out the work described in its application to DOE:

Direct Labor	$100,000
Travel	3,000
Equipment	17,000
Supplies	10,000
Subcontract	20,000
Total Project Cost	**$150,000**

A cost share requirement of 20% was specified in the funding announcement.
Cost Share = (cost share percentage) × (***total project cost***)
Cost Share = (20%) × ($150,000)
Cost Share = $30,000

The applicant must now identify $30,000 of $150,000 as "Cost Share."
The applicant would then request DOE funding in the amount of $120,000.

DOE Share = $120,000 **Awardee Share = $30,000**

Example 2

The applicant determines that the following budget requirements are needed to carry out the work described in its application to DOE:

Direct	$200,000
Labor	10,000
Travel	20,000
Equipment	10,000
Supplies	60,000
Total Project	**$300,000**

A cost share requirement of 20% was specified in the funding announcement.

Cost Share = (cost share percentage) × (total project cost)
Cost Share = (20%) × ($300,000)
Cost Share = $60,000

The applicant must now identify $60,000 of $300,000 as "Cost Share." DOE would pay $60,000 directly to the FFRDC. The applicant would then request DOE funding in the amount of $180,000.

DOE Share = $180,000 (funds to Awardee) + $60,000 (FFRDC) = $240,000

Awardee Share = $60,000

NOTE: FFRDC funds are paid directly to the FFRDC by DOE. The work provided by the FFRDC is still considered part of the total project cost; therefore, it is included in the base from which the Awardee cost share is calculated.

In all cases, the applicant must specify the individual costs that make up each part of the total project cost and indicate whether DOE or non-DOE funds will be used to cover the cost.

The budget from **Example 1** might look something like the following:

		DOE	**Non-DOE**
Direct Labor	$100,000	$70,000	$30,000
Travel	3,000	3,000	0
Equipment	17,000	17,000	0
Supplies	10,000	10,000	0
Subcontract	20,000	20,000	0
Total Project Cost	**$150,000**	**$120,000**	**$30,000**

The application forms in this FOA will facilitate the identification of funding sources.

I. NOTICE REGARDING ELIGIBLE/INELIGIBLE ACTIVITIES

Eligible activities under this program include those which describe and promote the understanding of scientific and technical aspects of specific energy technologies, but not those which encourage or support political activities such as the collection and dissemination of information related to potential, planned, or pending legislation.

J. NO-COST TIME EXTENSIONS

Unilateral no-cost time extensions will NOT be permitted to awards made under this FOA. All no cost-time extensions must provide adequate justification and receive approval from the Contracting Officer. No cost-time extensions should be requested as soon as the need is identified and normally no later than 3 months before the original project end date.

No cost time extensions on existing DOE-NE funded projects must be requested by April 15, 2017. Any request beyond this date must be submitted after October 1, 2017. No cost time extensions must be submitted to NEUP@inl.gov.

K. CONFERENCE SPENDING

The recipient shall not expend any funds on a conference not directly and programmatically related to the purpose for which the grant or cooperative agreement was awarded that would defray the cost to the United States government of a conference held by any executive branch department, agency, board, commission, or office for which the cost to the United States government would otherwise exceed $20,000, thereby circumventing the required notification by the head of any such executive branch department, agency, board, commission, or office to the inspector general (or senior ethics official for any entity without an inspector general), of the date, location, and number of employees attending such conference.

PART IX – APPENDICES/REFERENCE MATERIAL

Appendix A: Workscopes for U.S. University-led Program and/or Mission Supporting R&D Projects

Appendix B: Workscopes for U.S. University-, National Laboratory-, or Industry-led Program and/or Mission Supporting R&D Projects

Appendix C: Workscopes for U.S. University-led Integrated Research Project (IRP) R&D

Appendix D: Data Needs for Validation

Appendix E: Accessing Nuclear Science User Facilities

Appendix F: Draft Nuclear Science User Facilities User Agreement

Appendix A: Workscopes for U.S. University-led Program and/or Mission Supporting R&D Projects

PROGRAM SUPPORTING: NUCLEAR REACTOR TECHNOLOGIES

MATERIALS COMPATIBILITY FOR HIGH TEMPERATURE LIQUID COOLED REACTOR SYSTEMS (RC-1)
(FEDERAL POC – BILL CORWIN & TECHNICAL POC – SAM SHAM)
(ELIGIBLE TO LEAD: UNIVERSITIES ONLY)
(UP TO 3 YEARS AND $800,000)

Advanced high temperature nuclear reactor systems may utilize liquid coolants to optimize heat transfer, neutronics, safety, and compactness of the nuclear supply system or other reasons to improve the operations or efficiency of the reactor system. Examples of such systems in which corrosion is a particular challenge are lead- (or lead-bismuth-eutectic-) cooled reactors and liquid-salt cooled reactors (both those in which the fuel is fixed and those where it is dissolved in the coolant, i.e., molten salt reactors.) In each of these types of reactors, the structural components of the primary systems in contact with the reactor coolant, as well potentially as those in the secondary or tertiary, must be adequately compatible with the materials of the components. In particular, corrosion must be addressed, including, but not limited to: bulk corrosion, intergranular corrosion, pitting, erosion, and both thermally and chemically induced mass transport between various portions or subcomponents of the system. Additionally, effects of coolant velocity and purity are also very significant and should be considered. These issues were highlighted in recent technology specific workshops on molten salt and fast reactors that were co-hosted by the GAIN initiative, NEI, and EPRI. Resolution of some or all of these issues will potentially aid in bringing these reactor technologies closer to commercialization.

Current materials permitted for construction of high-temperature components of nuclear reactors contained in Section III Division 5 of the ASME Boiler and Pressure Vessel Code are limited and may not be considered optimum for corrosion resistance with respect to the liquid coolants for either of the aforementioned high temperature reactor systems. Other materials or combinations of materials (including bimetallic construction, such as weld overlay cladding on a Code-approved construction material) may be considered as alternative approaches, but will eventually need to be approved by the ASME Code.

The objective of this project is to assess the potential materials to be used for construction of ASME Code covered components of lead- (or lead-bismuth-eutectic-) or salt-cooled high temperature reactors (e.g. vessels, pipes, heat exchangers, internals, etc.) and identify preferred candidate materials for such components. Such assessments should include detailed summaries of previous experimental determination of corrosion and erosion effects, augmented by laboratory experiments as deemed necessary, and analytical extrapolations of the corrosion results to anticipated service times. For candidate materials already included as approved for high temperature usage in Section III Division 5, this assessment shall consist of a determination of the type(s), rate(s) and overall allowance(s) of corrosion likely to occur for the primary system component(s) anticipated to be constructed of the candidate materials compared to the anticipated lifetimes for the specific components. For example, a reactor pressure vessel might be anticipated to serve the full 60-year life of the reactor, whereas a heat exchanger might be anticipated to be replaced every seven to ten years.

For candidate materials not already approved for use within Div 5, a sufficiently detailed pathway needs to be described that that would result in approved Code usage of the material for high temperature reactor applications. Approval of new base metals and associated weldments that have the required corrosion resistance and elevated temperature strength, and in accordance with the requirements of Division 5, Appendix HBB-Y for pressure boundary and core support structures, will require comprehensive and very long term test data.

Modifications of existing Sec III Div 5 design rules to include novel materials approaches, such as bimetallic structures or clad structures, may be evaluated. Rules for the design and construction of cladded components are provided in ASME Sec VIII for non-nuclear pressure vessel applications and ASTM specifications for various clad steel plates are also available. However, current Section III Code rules for cladded structural components in elevated temperature service have been assessed as delinquent in several areas. Most notably in Div 5 Paragraph HBB-3227.8(d) where it requires that the cladding shall be considered in calculations related to limitations on deformation controlled quantities, i.e. cyclic loading, but does not provide guidance or requirements for that assessment. Effects of thermal stress from thermal property mismatch must also be considered.

PROGRAM SUPPORTING: NUCLEAR REACTOR TECHNOLOGIES

Overall project results should include all experimental and analytical extrapolations of corrosion effects versus anticipated service lives for recommended materials. Any required modifications of the Code materials or design methods should be described in sufficient detail as to include a rough order of magnitude of the time and level of resources required for the Code modifications to be made.

RADIOISOTOPE RETENTION IN GRAPHITE AND GRAPHITIC MATERIALS (RC-2)
(FEDERAL POC – MADELINE FELTUS & TECHNICAL POC – PAUL DEMKOWICZ)
(ELIGIBLE TO LEAD: UNIVERSITIES ONLY)
(UP TO 3 YEARS AND $800,000)

Graphite is a primary core material across multiple types of advanced reactors (i.e., HTGR, FHR, and MSR) which have common material issues such as irradiation-induced material property changes, chemical reactivity, and material degradation. Fundamental studies determining the underlying mechanisms driving the material behavior as well as the impact from these effects on the core behavior is required for design and licensing can be completed for these advanced reactor concepts.

A major issue of concern for MSR, FHR, and VHTR designs is the retention of activated fission products within graphite and graphitic materials such as the graphitic matrix composite used in TRISO particle fuel forms (pebbles or compacts). Radioactive material of fission product release from the fuel or from neutron reactions with molten coolant and fuel (lithium in FLiBe or FLiNaK in MSR designs) can be retained in carbon matrix, carbon-carbon composites, and graphite components. Research is needed on those graphite properties that are important for retention (and potential release) of these radioisotopes from a material possessing a graphitic crystal structure. Of particular interest is the chemisorption potential for various species, RSA efficiency, diffusion and intercalation efficiency, microstructure effects (grain size, BET, porosity distribution, source material), and at partial pressures of hydrogen (tritium and entrained water) over a range of high temperatures (500-1600C). This will assist in determining total inventory of retained products for accurate source term calculations required for licensing, determining the possibilities of tritium removal from carbon-based materials, and core component performance issues. The sorption/desorption isotherms of key fission products (including silver, cesium, strontium, and europium) in irradiated nuclear grade graphites for the high temperature reactors need to be determined. Research projects may use un-irradiated graphitic material and non-radioactive isotopes of the key fission products as surrogates to determine fission product retention behavior; however, comparison of parameters with the results from irradiated TRISO fuel forms and irradiated graphite experiments is encouraged.

The objective of this project is to assess the retention of activated fission products within graphite as a function of the microstructural, fission product, and environmental conditions examined. Overall project results should include a description of all experimental conditions examined, analytical methods employed, and resulting effects on transport and retention of the various species examined.

SIC/SIC COMPOSITES: DETECTION, EVALUATION, AND PREDICTIVE MODELING OF DEGRADATION OF SIC/SIC COMPOSITE STRUCTURAL COMPONENTS IN OPERATING REACTOR ENVIRONMENTS (RC-3)
(FEDERAL POC – BILL CORWIN & TECHNICAL POC – YUTAI KATOH)
(ELIGIBLE TO LEAD: UNIVERSITIES ONLY)
(UP TO 3 YEARS AND $800,000)

There are a number of advanced reactor concepts that are limited by the availability of structural materials that can withstand the high temperature, corrosive coolant environments. Examples are gas-cooled fast reactors, lead- (or lead-bismuth-eutectic-) cooled fast reactors and liquid-salt cooled thermal or fast reactors where the fuel may be solid (e.g., fluoride-salt-cooled high-temperature reactors) or dissolved in the coolant (e.g., molten salt reactors.) The need for understanding the performance of these materials in advanced reactor systems was recently re-emphasized in molten salt and fast reactor technology specific workshops conducted by the GAIN initiative.

PROGRAM SUPPORTING: NUCLEAR REACTOR TECHNOLOGIES

Due to their high temperature and corrosion resistance properties, silicon carbide fiber, silicon carbide matrix (SiC/SiC) composites are being considered as potential construction materials for core structural components in these advanced reactor systems. Currently, probabilistic design rules for SiC/SiC composites are being developed for Section III Division 5 of the ASME Boiler and Pressure Vessel Code for high temperature reactors.

One of the critical failure mechanisms for the SiC/SiC composites is the slow crack growth that would lead to stress rupture in a prolonged service period. Such slow crack growth is often assisted by the chemical operating environments and likely accelerated by neutron irradiation. This is analogous to (irradiation-assisted) stress corrosion cracking for metallic alloys. To ensure that the SiC/SiC composite components maintain the structural integrity throughout the design lifetime, it is essential to develop an understanding of the phenomena and related experimental techniques.

As a first step to addressing these complex issues, the objective of this work is to develop a scientific understanding and innovative advanced methods toward the detection, evaluation, and prediction of degradation for SiC/SiC composite components in the operating environments of these advanced reactor systems. The focus will be on the generation, accumulation, and extension of structural damages of SiC/SiC composite components under loads and in reactor coolant environments at operating temperatures. While development of a predictive capability is the ultimate goal of this work, practical implementations of the principles and/or methods to be developed to in-service inspections may be considered. Neutron irradiation effect is not included in the scope of this work and will be addressed in future calls. The results from this work should support the code rule development for SiC/SiC composite core components for high temperature reactors in ASME Boiler and Pressure Vessel Code Section III Division 5.

Advanced Reactor Methods Topics (RC-4)
(SEE BELOW FOR POCS)

The R&D activities on computational methodologies under the DOE-NE's Advanced Reactor Technologies (ART) program are focused on development of modeling and simulation tools for Generation IV reactors such as sodium-cooled fast reactors (SFRs), high temperature gas-cooled reactors (HTGRs), fluoride high temperature reactors (FHRs), and molten salt reactors (MSRs).

Sodium Fast Reactor (SFR) Scope (RC-4.1)
(FEDERAL POC – Tom Sowinski & TECHNICAL POC – Tanju Sofu)
(ELIGIBLE TO LEAD: UNIVERSITIES ONLY)
(UP TO 3 YEARS AND $800,000)

The R&D activities on computational methodologies under the DOE-NE's Advanced Reactor Technologies (ART) program is focused on development of modeling and simulation tools to study the Sodium-cooled Fast Reactor (SFR) core neutronics/thermal hydraulics/structural performance during normal operations and postulated accidents. This could be accomplished by developing and gaining regulatory acceptance of reduced-order models that predict important safety behaviors. ART program methods development focus on a range of areas such as neutronics analysis of complex reactivity feedback mechanisms, thermal-hydraulics analysis of very low Prandtl-number liquid metal heat transfer, and system analysis of whole-plant dynamics. Code development activities include enhanced transient and severe accident analysis capabilities tailored to important phenomena specific to SFRs.

To support development of an integrated multi-physics analysis tool suite and validation of its components, contributions to development of advanced modules and/or conducting of tests to provide validation data are being sought with the objective to raise the technical readiness of SFR concepts and support commercial deployment by a vendor. Example areas of interest include, but are not limited to, reduced order modeling of air flow around the top of a sodium pool fire and experimental data and models for wire-wrapped SFR fuel assembly thermal hydraulics.

PROGRAM SUPPORTING: NUCLEAR REACTOR TECHNOLOGIES

Wire-wrapped rod bundles are ubiquitous in core designs for liquid metal reactors. While ideal to enhance mixing while limiting the pressure drop, wire-wrapped rod bundles present challenges to advanced modeling and simulation efforts (such as those that are being pursued under NEAMS program) as little available data is suitable for validation and researchers have to rely on code-to-code comparison [Merzari *et al*., Benchmark exercise for fluid flow simulations in a liquid metal fast reactor fuel assembly, *Nuclear Engineering and Design*, **298**, pp. 218-228 (2016)]. Proposals aimed at developing high-quality, high-resolution heat and flow datasets in wire-wrapped rod bundles targeting Nek5000 CFD validation will be a priority. The datasets should include high-resolution, three-dimensional, concurrent measurements of velocity, temperature and second order statistics (e.g., rms of the velocity components). Proposals including also time dependent measurements of wall shear and pressure will be prioritized. Proposals should focus on multiple bundle sizes, starting with at least 7 rods, for a range of Reynolds numbers including low flow conditions. Proposals that include natural and mixed convection as well as forced convection are particularly encouraged.

High Temperature Gas Reactor (HTGR) Scope (RC-4.2)
(FEDERAL POC – Diana Li & TECHNICAL POC – Hans Gougar)
(ELIGIBLE TO LEAD: UNIVERSITIES ONLY)
(UP TO 3 YEARS AND $800,000)

Experimental validation of HTGR simulations is focused on providing high quality data for the validation of system and computational fluid dynamics models of high temperature gas-cooled reactor (prismatic or pebble bed) phenomena. These phenomena have been identified as relevant to core safety and performance but for which insufficient data exist for validating models and codes. The phenomena are important during loss of forced cooling transients in which decay heat is transported by natural circulation, conduction, and radiation within and from the reactor vessel. This may occur in conjunction with the loss of pressure and coolant inventory resulting from a break in piping or an associated component (e.g. a relief valve). Under these conditions, coolant flow within the vessel is driven by natural circulation and may exhibit complex behavior involving mixing of streams of different temperatures (and cooler air after depressurization), reversed flow, and stratified flow.

Validation of models that capture these phenomena requires the coordinated completion of a number of fundamental, separate effects (SET), mixed effects (MET) such as combined mass flow and heat transfer, and integral tests, all properly scaled to reproduce the thermal fluid conditions bounding gas-cooled reactor under nominal and accident scenarios. The General Atomics 350 MWt MHTGR and 600 MWt GT-MHR serve as reference designs for scaling of existing experiments. To provide consistent and complementary sets, new separate and mixed effects experiments should be scaled to the design used for the corresponding integral experiment whenever possible. On the other hand, separate effects experiments using flexible hardware can be used to investigate different flow geometries and temperature conditions that can yield data which are relevant to multiple designs and operating regimes.

Integral testing facilities are generally large, long-term investments generally beyond the scope of NEUP awards, however, a few have been built for this purpose using other sources of funding. The High Temperature Test Facility (HTTF) at Oregon State University and the Natural circulation Shutdown Test Facility (NSTF) at Argonne National Laboratory (ANL) are examples of facilities conducting large integral tests. The NGNP Alliance is sponsoring investigations of reactor building atmospheric response to primary leaks and using the MHTGR as a reference design. Argonne National Laboratory is host to the Natural Circulation Shutdown Test Facility, currently scaled to the MHTGR, which simulates reactor vessel cooling via thermal radiation and natural circulation. The NSTF has recently completed its air-based heat removal testing with the facility scaled to the MHTGR and is being converted to a water-based test configuration scaled to the 625 MWt AREVA SC-HTGR.

This year, the RC-4.2 call focuses on phenomena associated with loss-of-forced-cooling scenarios with or without a break in the primary coolant boundary. These phenomena include: buoyancy-driven flows between the core cooling channels and the upper and lower plena, mixing and venting of helium and reactor cavity air after a break in the primary coolant boundary, and flow patterns that may occur in multiple RCCS channels connected to a common plenum. Proposals will be accepted for high fidelity experimental and computational investigation of these

PROGRAM SUPPORTING: NUCLEAR REACTOR TECHNOLOGIES

phenomena, specifically:

Core channel –plenum flow exchange - The loss of forced cooling leads to natural circulation between cooler and hotter regions within the vessel, especially between the core coolant channels and the lower and upper plena. Helium may emerge from one set of coolant channels into a plenum and return through another, or through the gap between the side reflector and core barrel. Proposals are sought for high fidelity investigations of the fluid dynamics of buoyancy-driven flow through multiple, non-uniformly heated channels into common inlet and outlet plena. Similar investigations of plenum-to-plenum flow within packed (pebble) bed cores are of interest.

Mixing of helium jets with cavity air - In the event of a pipe break, the helium emerges from the leak into the reactor cavity forcing air out of the building. The nature of stratification and/or mixing of the helium and air near the break and the geometry of the cavity determine how much air may leak back into the vessel after depressurization. This scenario is being investigated at the High Temperature Test Facility (HTTF) at Oregon State University but is applicable to all HTR designs, including the pebble bed concept being pursued by X-Energy and the StarCore and AREVA prismatic concepts.

RCCS fluid behavior - Without active cooling, heat is transported from the vessel by radiation to reactor cavity cooling system (RCCS) panels lining the cavity. The RCCS transports the heat to the outside atmosphere by natural circulation of coolant within individual panels into a plenum. Non-uniform heating of the panels and mixing of the streams in the plenum may lead to reverse flow and other complex behavior that affects system performance. Air-cooled RCCS experiments have been performed at the Natural circulation Shutdown Test Facility (NSTF) at Argonne National Laboratory. Work has begun to convert NSTF to a water-cooled configuration.

- Proposals are sought for global analysis of the air-cooled RCCS and related data along with scaling studies for a full-scale model.
- Development of advanced computational methods to model the water-based NSTF RCCS including radiation heat transfer, conduction, convection, and boiling under various flow conditions including flow instabilities. Well-controlled small-scale experiments with high-resolution (both time and spatial) transient two-phase measurements (especially during various type of two-phase flow instabilities) will also be considered. These experiments would support development of two-phase modeling capabilities. Of particular interest are: 1) the scaling between the number of riser tubes (which can be as high as 100 tubes per chimney) and the chimney piping section dimensions, and 2) the evaluation of fluid-structure interactions and resulting loading on piping systems during two-phase flow instabilities and 'geysering' in the water-based system, since this phenomenon is anticipated to occur within operating regime of the system.

As lower order models of thermal-fluidic behavior are to be used for most design and licensing activity, instrumentation should be designed with this in mind. Complementary higher order modeling (e.g. CFD) and validation thereof is, nonetheless, strongly encouraged as this supports greater understanding of phenomena and helps to quantify uncertainties inherent in the lower order models. In particular, diagnostics are sought that can provide high fidelity data for validating higher-order models at operational pressures and temperatures.

For proposals including development of new advanced computational tools or methods, only those that apply, enhance or extend NEAMS ToolKit components will be considered. Applicants are strongly encouraged to consult with HTR vendors, the INL, and ANL to develop proposals which reflect a clear understanding of HTR operational conditions, overall transient behavior, and relevant design features. Applicants are also encouraged to consult with the ART and NEAMS programs on how their advanced computational tools should be applied to this work scope.

All experiments must be performed to NQA-1 standards. Data experiments and calculations shall be submitted to the Idaho National Laboratory's NGNP Data Management and Analysis System (NDMAS). Assistance shall be provided by the INL (and ANL for experiments related to NSTF).

PROGRAM SUPPORTING: NUCLEAR REACTOR TECHNOLOGIES

Molten Salt Reactor (MSR) Scope (RC-4.3)
(FEDERAL POC – Diana Li & TECHNICAL POC – David Holcomb)
(ELIGIBLE TO LEAD: UNIVERSITIES ONLY)
(UP TO 3 YEARS AND $800,000)

ART program FHR and MSR R&D currently seeks demonstrations and models of salt thermal hydraulic phenomena to validate FHR and MSR safety codes. While use of simulant fluids can support these efforts, proposals are sought to validate principals of similitude for these fluids.

Above 700 °C, radiative heat transfer becomes an important heat transfer mechanism in high-temperature fluoride and chloride salts molten salts and increases as to the fourth power of absolute temperature. Since heat transfer determines anticipated temperatures under both normal and accident conditions, reliable heat transfer predictions are required. Currently, the required optical properties of these salts have not been measured over the required temperature range and the computational fluid dynamic tools do not currently exist for accurate temperature predictions during the radiative heat transport regime. Proposals are sought to measure salt properties and/or develop methodologies to accurately determine salt temperatures during the radiative heat transport regime.

For proposals including development of advanced computational tools or methods, only those that apply, enhance or extend NEAMS ToolKit components will be considered. Applicants are encouraged to consult with the ART and NEAMS programs on how their advanced computational tools should be applied to this work scope.

In addition to the issues discussed above, a recent MSR technology specific workshop hosted by the GAIN initiative, NEI, and EPRI identified several other areas of interest. Liquid fuel reactor modeling and simulation tool **development helps to address some of these** – Existing reactor modeling and simulation tools are designed for solid, immobile, heterogenous fuel systems. Issues such as delayed neutron precursor flow, bubble formation and collapse, and fuel thermal expansion outside of the critical region are not readily modeled using existing simulation tools.

MATERIALS AGING AND DEGRADATION (RC-5)
(FEDERAL POC – RICHARD REISTER & TECHNICAL POC – KEITH LEONARD)
(ELIGIBLE TO LEAD: UNIVERSITIES ONLY)
(UP TO 3 YEARS AND $800,000)

Assessment of long-term nuclear component behavior is a complicated challenge, due to multiple environmental variables that act on materials. Equally challenging is the ability to represent these conditions in laboratory testing, along with developing the appropriate monitoring techniques that might be applied in the field. Numerous challenges are associated with the different materials types that can include the over 25 different metal alloys found within the primary and secondary coolant systems, the miles of cables located throughout the plant and concrete structures that make up the largest volume of material used in power plants. Understanding the modes of degradation as well as developing the techniques to monitor changes in materials is essential to making appropriate decisions required to maintain the safe and economical operation of nuclear plants.

The Expanded Materials Degradation Assessment (EMDA), detailed in NUREG-CR7153 identifies knowledge gaps in relation to long-term materials degradation behavior and known risks in light water reactors. Many of these potential knowledge gaps are being researched under the base LWRS program, although there are needs for innovative and creative research to close potential knowledge gaps in other areas not currently be addressed by ongoing LWRS funded research. Some of these gaps include alloy 308/309 and 82/182 weldment performance, particularly effects of high (>15 dpa) irradiation on performance and SCC susceptibility as a function of water chemistry. Other research needs include the development of non-destructive examination (NDE) techniques for the

PROGRAM SUPPORTING: NUCLEAR REACTOR TECHNOLOGIES

assessment of cable insulation health and concrete damage.

Specifically, research proposals to address degradation and/or mitigation in second-license renewal environments are sought in the following areas:

- Effect of irradiation (typically over 15 dpa) on fracture toughness, irradiation creep, swelling, and stress corrosion cracking (SCC) for Type 308 and 309 stainless steel weldments; with particular emphasis on the impact of water chemistry on SCC;
- Long-term operational effects on embrittlement and mechanisms of SCC susceptibility of alloy 82/182 weldments, with particular emphasis on boiling water reactor normal water chemistry and hydrogen water chemistry conditions;
- Development of a practical NDE tool for characterizing defects or damage within reinforced concrete at deep (up to one meter or more) depths through use of a wide aperture ultrasonic array device;
- The development of a practical ultrasonic array signal interpretation tool that merges 3D visco-elastodynamic simulations (Kirchhoff migration or more modern inverse methods) with signal interpretation tools into a computationally efficient program for the accurate characterization of reinforced concrete;
- Development of more sensitive NDE techniques to evaluate electrical cable insulation health to determine end of useful life through techniques such as interdigital capacitance, infrared spectroscopy, near-infrared spectroscopy, or time and frequency domain reflectometry.

INFORMATION, INSTRUMENTATION AND CONTROLS (II&C) (RC-6)
(FEDERAL POC – RICHARD REISTER & TECHNICAL POC – BRUCE HALLBERT)
(ELIGIBLE TO LEAD: UNIVERSITIES ONLY)
(UP TO 3 YEARS AND $800,000)

A variety of efforts are undertaken to prevent nuclear safety challenges from occurring during nuclear power plant refueling outages. Historically, some of these challenges have been due to failure of equipment credited for safety, though the majority has occurred because of human error. These typically involve some form of interaction between work activities and plant configuration changes. Some of them are very subtle and are extremely challenging to detect in advance. Nevertheless, they are not acceptable and represent clear opportunities to improve nuclear safety during outages.

Research is sought to develop technologies that can be integrated into new operational concepts of managing outages at nuclear power plants to reduce safety challenges. This may include technologies that integrate information (e.g., informatics, analytics, etc.) to anticipate situations of potential risk in advance of their occurrence; new means of presenting this type of information to outage managers and workers; and methods of obtaining and updating information used for managing outages with real-time or near-real time information.

REACTOR SAFETY TECHNOLOGIES (RC-7)
(FEDERAL POC – RICHARD REISTER & TECHNICAL POC – MITCH FARMER)
(ELIGIBLE TO LEAD: UNIVERSITIES ONLY)
(UP TO 3 YEARS AND $800,000)

A current knowledge gap is related to fuel assembly/core-level degradation. In particular, there are gaps in the existing database for modeling late-phase in-core fuel and structure degradation and relocation, particularly with respect to phenomena that affect multiple assemblies in BWRs. These gaps have led to differences in current modeling approaches adopted by accident progression codes that strongly impact predicted accident progression behavior. Recent studies have shown that the principal uncertainty in the database is the extent that core debris

PROGRAM SUPPORTING: NUCLEAR REACTOR TECHNOLOGIES

formed during assembly melting is permeable to gas flow during degradation.

Another gap relates to the influence of raw water on the ability to maintain long term core cooling. During the Fukushima accidents, large volumes of seawater were injected into Units 1, 2, and 3 in an effort to cool the reactor cores and stabilize the accident. The main issue with raw (including sea) water injection is that as a result of boiling in the core, large amounts of solute could precipitate on the surface of fuel pins, thereby restricting coolant flow passages and degrading heat transfer. For beyond design basis accidents conditions involving highly degraded core conditions, there is a similar concern that precipitates could block porosity in the debris, thereby degrading the coolability.

Research is sought related to one or both of these gaps:

Fuel assembly/core-level degradation: Reexamine previously conducted tests related to in-core melt progression to determine if additional insights can be obtained that reduce knowledge gaps related to porosity formation during in-core melt relocation, agglomeration, and blockage formation. Possible experiment signatures that could provide indications of the rate and extent of blockage formation include steam mass flowrate, hydrogen flowrate, and flow assembly pressure drop. A secondary objective of this scope of work is to develop first principles models/correlations for predicting the blockage permeability as a function of flow channel thermal-hydraulic conditions.

Influence of Raw Water Additions: Carry out bench top experiments and/or analysis to develop phenomenological correlations for predicting boiling heat transfer to core debris under in-vessel and/or ex-vessel accident conditions. The ultimate goal is to provide correlations that characterize the effects of raw water on heat transfer for implementation into system level accident analysis codes such as MAAP and MELCOR. The upgraded codes can then be applied to postulated accident sequences to scope out potential consequences related to core debris cooling and fission product release.

LEVERAGING STATIC PRA INFORMATION INTO RISMC SIMULATION METHODS (RC-8)
(FEDERAL POC – RICHARD REISTER & TECHNICAL POC – CURTIS SMITH)
(ELIGIBLE TO LEAD: UNIVERSITIES ONLY)
(UP TO 3 YEARS AND $800,000)

The purpose of the Risk Informed Safety Margin Characterization (RISMC) Pathway is to support plant decisions for risk-informed margins management with the aim to improve economics, reliability, and sustain safety of current nuclear power plants (NPPs). Goals of the RISMC Pathway are twofold: (1) Develop and demonstrate a risk-assessment method coupled to safety margin quantification that can be used by NPP decision makers as part of their margin recovery strategies. (2) Create an advanced "RISMC toolkit" that enables more accurate representation of NPP safety margin. By using the concept of probabilistic risk assessment (PRA), the RISMC methodology can be used to optimize plant safety and performance by incorporating plant impacts; time- and space-based risk assessment; and human actions into the safety analysis via highly-integrated simulation.

One of the traditional outcomes in static PRA is the frequency for a certain outcome (e.g., core damage) in addition to the supporting "cut sets." Even though this information has a precise use from a regulatory point of view, additional information could actually be generated – this extra information is potentially extremely valuable. However, in these static PRA analyses, a simulation (or representation) of the accident evolution is not performed. For example, the impact of timing and sequencing of events may only be considered in an "averaged" fashion and phenomenology (e.g., thermal-hydraulics) may be inferred from off-line calculations. In order to overcome these limitations (and to extend the analysis into applications such as plant economics), a series of PRA methodologies that employ system simulation have been developed within the RISMC Pathway.

While the use of the dynamic simulation approach reduces conservatisms in the analysis, one issue has been raised is the topic of how to augment and leverage the existing investment in static PRA models. For example, a seamless hybrid PRA (combining static and dynamic elements) is of interest in order to facilitate newer

PROGRAM SUPPORTING: NUCLEAR REACTOR TECHNOLOGIES

methods while still using the existing probabilistic information that is available for every light water reactor in the U.S. Further, it is envisioned that this hybrid approach can be used to evaluate a range of metrics including economic impacts, enterprise risk management, and accidents. Proposals are encourage that will address the research focus of this project to:

- Determine what needs to be translated from static to dynamic PRAs (using a graded approach to focus on the highest value information from a simulation standpoint).
- Determine how should this information be translated, and see if automated methods can be employed.
- Determine how to ensure the accuracy of the static-to-dynamic extensions, and proposed approaches to validate the new models.
- Determine how to focus the resulting scenario analysis into metrics such as economic and accident end-states.

The focus of the research will be on using the safety analysis simulation RISMC Toolkit currently under development in the Light Water Reactor Sustainability (LWRS) Program in order to produce an integrated static-and-dynamic risk model. A desirable outcome will be the creation of a "generic" pressurized water reactor or boiling water reactor model that contains the integrated static and dynamic elements that will be available for use by the U.S. nuclear power industry.

LIGHT WATER REACTOR SUSTAINABILITY ENTERPRISE RISK MANAGEMENT (RC-9)
(FEDERAL POC – RICHARD REISTER & TECHNICAL POC – CURTIS SMITH)
(ELIGIBLE TO LEAD: UNIVERSITIES ONLY)
(UP TO 3 YEARS AND $800,000)

The purpose of the Risk Informed Safety Margin Characterization (RISMC) Pathway is to support plant decisions for risk-informed margins management with the aim to improve economics, reliability, and sustain safety of current nuclear power plants (NPPs). Goals of the RISMC Pathway are twofold: (1) Develop and demonstrate a risk-assessment method coupled to safety margin quantification that can be used by NPP decision makers as part of their margin recovery strategies and (2) Create an advanced “RISMC toolkit” that enables more accurate representation of NPP safety margin.

Safety is central to the design, operation, and economics for many of today’s complex systems. Designers commonly “over-design” portions of a system to provide robustness in the form of redundant and diverse features to ensure protection. However, the ability to better characterize safety margin is important to improved decision making about design and operation of systems. An enhanced approach to characterizing safety margins and the subsequent risk-informed margins management options represents a vital input to analysis and decision making.

Recent risks to the nuclear industry have been related to economics and safety impacts. Taken individually, any one risk does not automatically provide a mandate for a holistic approach to risk management. Taken together, however, they do provide a case that the nuclear power industry can better understand, manage, and communicate a variety of risk (e.g., safety, economics, infrastructure, equipment, staff, assets, etc.). The research proposed in this project will result in enhancements in how the industry managed these risks – collectively identified as enterprise risk management (ERM) – by leveraging the methods and tools being developed within the Light Water Reactor Sustainability Program.

Risks to safety and plant assets need to be managed in a cost-effective fashion for continued industry viability. Research targeting ERM approaches to improve the sustainability of the current nuclear power fleet is the focus of this call. Proposals are being encouraged to:

- Understand the key drivers of risk that should be considered as part of ERM
- Provide sustainability models and metrics focusing on ERM that will help to ensure safety and enhanced

PROGRAM SUPPORTING: NUCLEAR REACTOR TECHNOLOGIES
performance of the nuclear fleet • Develop applicable models that will focus on quantifying operation efficiencies of existing plants over near- and long-term operation • Investigate ERM strategies that will be correlated to opportunities to increase efficiencies at nuclear power facilities • Leverage the LWRS models, tools, and data to support ERM by novel data/information assimilation, incorporation of predictive risk models, and application of informed virtual plant models • Provide a pilot study demonstrating the benefits of the LWRS-based ERM approach by teaming with a candidate nuclear power facility The proposed research should also be able to address some of the issues and approaches being raised by the Nuclear Energy Institute (NEI) as part of its proposed Nuclear Promise activities. This initiative will "identify efficiency measures and adopt best practices and technology solutions to improve operations, reduce electric generating costs and prevent premature reactor closures." Proposals should identify potential interactions with the Nuclear Promise, for example, by leveraging the LWRS technologies to provide "backstops" on specific initiatives or to provide additional technical basis for on-going activities within the Nuclear Promise.

MISSION SUPPORTING: NUCLEAR REACTOR TECHNOLOGIES

REACTOR CONCEPTS RD&D (MS-RC-1)
(FEDERAL POC – CARL SINK & TECHNICAL POC – PHIL SHARPE)
(ELIGIBLE TO LEAD: UNIVERSITIES ONLY)
(UP TO 3 YEARS AND $400,000)

This call is soliciting new and unique innovations and provides a NEUP pathway for less mature technologies and components.

Development of advanced reactor technologies that may offer the potential for revolutionary improvements to reactor performance and/or safety is sought. Such advanced reactor technologies could include the incorporation of advanced systems or components into existing concepts (e.g., ex-vessel ultrasonic backscattering based flowmeters for pool type high-temperature liquid reactors such as SFRs and LFRs), inclusion of innovative design alternatives (e.g., new fuel types, nano-engineered coolants), and designs employing radically different technology options (e.g., advanced coolants, fuel, or operational regimes). Proposals could also include reactors with unique capabilities to address operational missions other than the delivery of base load electric power, such as desalination or mobile reactors. The scope of the proposed project should include a thorough viability assessment of the technology or concept, a detailed technology gap analysis and a comprehensive technology development roadmap that identifies research needed on key feasibility issues.

SPACE NUCLEAR POWER SYSTEMS R&D (MS-RC-2)
(FEDERAL POC – SCOTT HARLOW & TECHNICAL POC – STEPHEN JOHNSON)
(ELIGIBLE TO LEAD: UNIVERSITIES ONLY)
(UP TO 3 YEARS AND $400,000)

The Space and Defense Power Systems program has designed, developed, built, and delivered radioisotope power systems (RPS) for space exploration and national security applications for over fifty years. RPS systems convert the decay heat from Pu-238 into electricity and are reliable, maintenance free, and capable of producing heat and electricity for decades. The program also supports technology development efforts for space reactor power systems for use on the surface of planets, in deep space, and for propulsion. Support for terrestrial use of small reactors is of interest for potential national security and deployable power applications. Nuclear power systems for space and terrestrial applications enable missions that require a long-term, unattended source of electrical power and/or heat in harsh and remote environments. The Department of Energy has traditionally assisted NASA technology development efforts for space reactor power systems and for nuclear thermal propulsion.

Applications are sought for conceptual designs for a portable compact reactor design that can be deployed for terrestrial applications. Proposals should address how a reactor can be integrated with a reliable, low maintenance and compact system that enables rapid transport, deployment and removal. Desired power output can range from 100 kWe to 1 MWe.

Applications are sought for the development of a nuclear thermal propulsion system that can be deployed for human-rated missions to Mars and for robotic missions to the Moon and for missions beyond Jupiter. The proposed system should utilize NERVA (Nuclear Engine for Rocket Vehicle Application) derived composite fuels with a desired thrust output range from 25,000 lb to 30,000 lb with a specific impulse of 900 seconds. Proposals should attempt to leverage existing NERVA fuel and reactor designs (and historical fuel and reactor performance data) to maximize proven technologies. Innovative designs for the reactor, the fuel, and the power conversion process must take into consideration the restrictions placed on space applications. Ideas addressing the integration of the proposed reactor within existing engine platforms or the creation of a reactor subsystem within the proposed space vehicle will also be considered.

Additionally, any novel power conversion systems, static or dynamic, that improves on the current state of the art are encouraged for consideration. These systems should be focused on conversion of heat from a radioisotope or

MISSION SUPPORTING: NUCLEAR REACTOR TECHNOLOGIES
fission heat source to electrical power. These systems should be operable in a space environment and have a special emphasis on low mass, durability (both reliability and robustness) and adaptability to varying system architectures. Of particular interest are conversion methods that, once developed, could be produced without the need to invest in the sustainment of a single-purpose supply chain.

PROGRAM SUPPORTING: FUEL CYCLE TECHNOLOGIES

MATERIAL RECOVERY AND WASTE FORM DEVELOPMENT (FC-1)
(SEE BELOW FOR POCS)

This program element develops innovative methods to separate reusable fractions of used nuclear fuel (UNF) and manage the resulting wastes. These technologies, when combined with advanced fuels and reactors, form the basis of advanced fuel cycles for sustainable and potentially growing nuclear power in the U.S.

FC-1.1: ELECTROCHEMICAL SEPARATIONS
(FEDERAL POC – STEPHEN KUNG & TECHNICAL POC – MARK WILLIAMSON)
(ELIGIBLE TO LEAD: UNIVERSITIES ONLY)
(UP TO 3 YEARS AND $800,000)

Elucidate the behavior and constitution of fission products such as, but not limited to, iodine and tellurium in molten salts relevant to electrochemical processing. A more complete understanding of the behavior and constitution of fission products in molten salt solutions under conditions typical for electrochemical processing is needed and will provide additional experimentally determined data that can be used in process models. The proposed research should evaluate the chemistry of, for example, iodine present as an iodide and/or tellurium present as a telluride in the molten salt solutions. Proposals related to off-gas handling and/or capture are not appropriate to this call.

FC-1.2: MATERIALS RECOVERY
(FEDERAL POC – JIM BRESEE & TECHNICAL POC – TERRY TODD)
(ELIGIBLE TO LEAD: UNIVERSITIES ONLY)
(UP TO 3 YEARS AND $800,000)

Fundamental solvent extraction chemistry - A number of solvent extraction technologies are being developed and evaluated for the separation of actinides from fission products and lanthanides. A deeper, fundamental understanding of advanced solvent extraction processes (e.g. ALSEP) is needed to design robust chemical separation flowsheets. Fundamental understanding of the kinetics of extraction and/or stripping of metals and the role of complexants to determine rate-limiting mechanisms of the transfer of metal ions between phases is needed. Deeper understanding of the thermodynamic parameters of solvent extraction processes, particularly for trivalent actinides and lanthanides that can lead to improvements in solvent extraction chemistry is needed. Finally, for all solvent extraction processes, particularly those involving multivalent metal ions, an understanding of the effects of gamma and alpha radiation on the process chemistry, with a goal of being able to predict the effects of radiation on the chemistry of the process, is needed.

FC-1.3: ADVANCED WASTE FORMS
(FEDERAL POC – KIMBERLY GRAY & TECHNICAL POC – JOHN VIENNA)
(ELIGIBLE TO LEAD: UNIVERSITIES ONLY)
(UP TO 3 YEARS AND $800,000)

FC-1.3a: Waste Forms Development- Thermodynamics of Waste Glasses and Melts – The fundamental mixture thermodynamics of waste glasses and melts as functions of temperature and composition are currently lacking in the scientific literature. An improved database and model for the thermodynamics can assist in formulation optimization and prediction of waste form stability. Of particular interest is the thermodynamics of melts in the composition region for commercial high-level waste glasses.

FC-1.3b: Fuel Processing Off-Gas Management- Tritium Separations Technology – Tritium management during reprocessing, accident response, and potentially reactor operation is a significant technological challenge. Novel, highly efficient technologies are needed to selectively remove tritium (as tritiated water) from the aqueous streams. The goal of the tritium removal system should be able to selectively recover tritiated water from aqueous / acid streams with concentrations of 1×10^{-5} to 1×10^{-7} or lower and provide tritium concentration factors of at least 1000.

PROGRAM SUPPORTING: FUEL CYCLE TECHNOLOGIES

FC-1.3c: Fuel Processing Off-Gas Management- Rb Interaction with Container Materials – Kr-85 is released to the off-gas streams during the reprocessing of used nuclear fuel. To meet current EPA requirements the Kr must be recovered and managed. Kr may be stored as a compressed gas or in a getter material. The decay daughter of Kr-85 is Rb, which is highly corrosive. The preliminary evaluation of the legacy Kr-85 storage capsules show what appears to be significant corrosion in the inside of the capsules even with zeolite Kr getters. Fundamental data is needed on corrosion rates and mechanisms as functions of Rb concentration, storage temperature, etc. for various storage approaches (e.g., as compressed gas or encapsulated in a getter material) for typical storage container materials.

ADVANCED FUELS (FC-2)
(SEE BELOW FOR POCS)

This program element develops advanced nuclear fuel technologies using a science-based approach focused on developing a microstructural understanding of nuclear fuels and materials. The science-based approach combines theory, experiments, and multi-scale modeling and simulation to develop a fundamental understanding of the fuel fabrication processes and fuel and clad performance under irradiation. The objective is to use a predictive approach to design fuels and cladding to achieve the desired performance (in contrast to more empirical observation-based approaches traditionally used in fuel development).

The advanced fuels program conducts research and development of innovative next generation LWR and transmutation fuel systems. The major areas of research include: enhancing the accident tolerance of fuels and materials, improving the fuel system's ability to achieve significantly higher fuel and plant performance, and developing innovations that provide for major increases in burn-up and performance. The advanced fuels program is interested in advanced nuclear fuels and materials technologies that are robust, have high performance capability, and are more tolerant to accident conditions than traditional fuel systems. Model development should be consistent with the placement and use in the NEAMS MOOSE-BISON-MARMOT (MBM) fuel performance code structure.

Proposers should also be familiar with the ongoing advanced fuels program and its past NEUPS to avoid duplication of activities already being supported or pursued.

FC-2.1: REACTOR POOL SIDE NON-DESTRUCTIVE CHARACTERIZATION TECHNIQUES FOR ADVANCED FUEL CONCEPTS
(FEDERAL POC – KEN KELLAR & TECHNICAL POC – JON CARMACK)
(ELIGIBLE TO LEAD: UNIVERSITIES ONLY)
(UP TO 3 YEARS AND $800,000)

Requests are sought for advanced non-destructive characterization techniques for advanced fuel (LWR ATF and advanced reactor fuel) that can be applied pool-side to a reactor, such as the Advanced Test Reactor, to provide characterization of irradiated fuels. Currently, irradiated fuel removed from an operating reactor or from a test reactor irradiation experiment is handled in a water pool environment. Advanced characterization techniques are sought that can provide information elucidating the physical condition, geometry, and general state of the nuclear fuel and cladding, with a particular focus on characterization of internal features and chemistry at the pool side (as an example, pool-side tomography).

PROGRAM SUPPORTING: FUEL CYCLE TECHNOLOGIES

FC-2.2: EXTREME PERFORMANCE METAL ALLOY CLADDING FOR FAST REACTORS
(FEDERAL POC – JANELLE EDDINS & TECHNICAL POC – STU MALOY)
(ELIGIBLE TO LEAD: UNIVERSITIES ONLY)
(UP TO 3 YEARS AND $800,000)

Requests are sought for a new out-of-the-box extreme performance metal alloy cladding concept. The new proposed concept should have the potential to achieve extreme transmutation fuels performance; namely, for fast spectrum reactors, propose a cladding that can achieve 60% burnup and 600 dpa (in iron) or greater, for prototypic temperatures up to 700C. Proposals may consider variations from existing alloys. Proposals must recognize the gaps to be overcome, and propose activities that will prove feasibility of their concept in comparison to existing cladding concepts. Proposals that provide a method to prove irradiation performance of their concept will be given highest priority.

FC-2.3: CRITICAL HEAT FLUX FOR ACCIDENT TOLERANT FUELS (ATF)
(FEDERAL POC – FRANK GOLDNER & TECHNICAL POC – JON CARMACK)
(ELIGIBLE TO LEAD: UNIVERSITIES ONLY)
(UP TO 3 YEARS AND $800,000)

One vital thermal-fluid characteristic related to an engineering evaluation of accident tolerant fuel and cladding is critical heat flux (CHF). The onset of CHF is typically associated with fuel failure and therefore plays a vital role in defining safety margins during normal operation and also in the progression of potential transient or accident scenarios. Early scoping studies have shown differences in key properties of candidate ATF cladding that impact CHF, like wettability and surface roughness. The combination of these new surface boundary conditions and the unique thermal properties of ATF designs impact both normal operation and accident behavior in complex ways. Proposals are encouraged for separate effects studies leading to enhancements in thermal modeling and simulation of ATF technologies. For proposed ATF cladding, activities should include determination of CHF under PWR and/or BWR conditions that results in departure from nucleate boiling (DNB) or dryout respectively.

Proposed efforts should focus on separate effects experiments but be tightly coupled with modeling, simulation, and validation efforts to study the impact of potential accident tolerant fuel cladding materials on CHF, during normal operation as well as in off-normal conditions. Given the near-term objective of the ATF program, model/correlation outputs should be compatible with 'industry standard' state-of-the-art modeling tools and should also explain applicability to modeling and simulation tools currently in use or applicability to advanced modeling and simulation capabilities under development by DOE-NE. The proposals should support lead fuel assembly or lead fuel rod irradiations by investigating relevant accident tolerant fuel and cladding thermal limits and design constraints.

ADVANCED PROCESS MONITORING FOR DOMESTIC NUCLEAR SAFEGUARDS (FC-3)
(FEDERAL POC – DANIEL VEGA & TECHNICAL POC – MIKE MILLER)
(ELIGIBLE TO LEAD: UNIVERSITIES ONLY)
(UP TO 3 YEARS AND $800,000)

Sensors, techniques, and approaches for integrative advanced process monitoring to enhance nuclear material control and accounting in used nuclear fuel reprocessing facilities. This area includes radiation based and non-radiation based approaches with the goal of providing quantitative analysis to supplement traditional nuclear material control and accounting measures resulting improved performance of the safeguards system to meet NRC Material Control and Accountability (MC&A) requirements.

PROGRAM SUPPORTING: FUEL CYCLE TECHNOLOGIES

USED NUCLEAR FUEL DISPOSITION: DISPOSAL (FC-4)
(FEDERAL POC – JC DE LA GARZA & TECHNICAL POC – PETER SWIFT)
(ELIGIBLE TO LEAD: UNIVERSITIES ONLY)
(UP TO 3 YEARS AND $800,000)

Assessments of nuclear waste disposal options start with the degradation of waste forms and consequent mobilization of radionuclides, reactive transport through the near field environment (waste package and engineered barriers), and transport into and through the geosphere. Research needs support the development of modeling tools or data relevant to permanent disposal of used nuclear fuel and high-level radioactive waste in a variety of generic disposal concepts, including mined repositories in clay/shale, salt, and crystalline rock, and deep boreholes in crystalline rocks. Key university research needs for the disposal portion of this activity include:

- Improved understanding of the degradation processes (i.e. corrosion) for heat generating waste containers/packages considering direct interactions with buffer materials in a repository reducing environment leading to the development of improved models to represent the waste container/package long term performance.
- Improved understanding of the degradation processes for engineered barrier materials (i.e., waste containers/packages, buffers, seals) under evolving repository thermal conditions and radionuclide transport processes through these materials leading to and including the development of improved models to represent these processes;
- Improved understanding of coupled thermal-mechanical-hydrologic-chemical processes in the near-field of relevant disposal model environments, leading to the development of improved models to represent these processes;
- Improved understanding of large-scale hydrologic and radionuclide transport processes in the geosphere of relevant disposal repository environments, leading to the development of improved models to represent these processes;
- Development of new techniques for in-situ field characterization of hydrologic, mechanical, and chemical properties of host media and groundwater in a deep borehole or an excavated tunnel;
- Development of pertinent data and relevant understanding of aqueous speciation and surface sorption at elevated temperatures and geochemical conditions (e.g., high ionic strength) relevant to the disposal environments being considered;
- Improved understanding of how used nuclear fuel waste forms degrade and perform in different disposal environments using theoretical approaches, models and/or experiments, with quantitative evaluations including uncertainties of how the long-term performance of used nuclear fuel waste forms can be matched to different geologic media and disposal concepts; and
- Experimental and modeling investigations for the effect of radiolysis on used fuel, high-level waste, and barrier material degradation at temperatures and geochemical conditions relevant to potential disposal environments.

MISSION SUPPORTING: FUEL CYCLE TECHNOLOGIES

FUEL CYCLE R&D (MS-FC-1)
(FEDERAL POC – BILL MCCAUGHEY & TECHNICAL POC – JACK LAW)
(ELIGIBLE TO LEAD: UNIVERSITIES ONLY)
(UP TO 3 YEARS AND $400,000)

The Fuel Cycle Research & Development program conducts generic (not site specific) research and development related to spent nuclear fuel, nuclear waste management and disposal issues. The program also conducts R&D on advanced fuel cycle technologies that have the potential to improve resource utilization and energy generation, reduce waste generation, enhance safety, and limit proliferation risk. Applications are sought for advanced fuel treatment or material recovery processes, innovative fuel designs, and innovative fuel cycle analysis tools. Areas of interest include "blue sky" concepts for advanced methods of managing used nuclear fuel, such as innovative recycling, transport, storage, and disposal concepts. Areas of interest for fuel R&D include, but are not limited to, advanced concepts for existing LWR and other thermal spectrum reactors and advanced transmutation fuels for fast or mixed spectrum systems. Advanced fuel concepts may also include LWR fuel with improved performance benefits and fast reactor fuel with improved cladding performance (e.g., ability to withstand 400 dpa).

PROGRAM SUPPORTING: NUCLEAR ENERGY ADVANCED MODELING AND SIMULATION

NUCLEAR ENERGY ADVANCED MODELING AND SIMULATION (NEAMS-1) (FEDERAL POC – DAN FUNK & TECHNICAL POC – BRAD REARDEN)

The Nuclear Energy Advanced Modeling and Simulation (NEAMS) program aims to take advantage of scalable simulation methods on high performance computing architectures in combination with a science-based, mechanistic approach to model multi-physics phenomena for predictive assessments of the performance and safety in a broad class of nuclear reactors. To ensure the accuracy of computational solutions, the NEAMS program also aims to validate underlying models (materials science, thermal-hydraulics, neutronics, and structural mechanics), through both separate effects as well as integral analyses. Such validation is essential to helping government and industry integrate predictive simulation-based high-performance computing models into their nuclear R&D activities. To support this integration, NEAMS also seeks to improve the convenience of using the tools for end users, demonstrate the use of the tools through advanced studies and benchmark analyses, and demonstrate improved results realized with high-fidelity tools over conventional methods.

The NEAMS program is seeking applications that contribute to improving the mechanistic models, computational methods, validation basis, and code integration and deployment for the NEAMS tools and their components in following six topical areas. Collaboration with members of the NEAMS development team residing at DOE laboratories as well as end users in industry or regulatory authorities is strongly encouraged.

NEAMS 1.1 – ATOMISTIC AND MESOSCALE MODELING AND SIMULATION OF NUCLEAR FUELS, CLADDING, AND REACTOR STRUCTURAL MATERIALS (ELIGIBLE TO LEAD: UNIVERSITIES ONLY) (UP TO 3 YEARS AND $800,000)

The NEAMS mesoscale nuclear materials simulation code MARMOT simulates the evolution of microstructure and the consequent change in material properties in fuel and cladding materials under irradiation. The microstructure evolution is described using the phase field method coupled to solid mechanics and heat conduction and solved using the finite element based Multiphysics Object Oriented Simulation Environment (MOOSE). MARMOT is dependent on free energies, diffusivities, and other data for material systems from experiments and atomistic simulations such as molecular dynamics and density functional theory. To date, MARMOT has primarily focused on LWR fuel (UO_2) and cladding materials (zirconium-based alloys), but in principle can be employed for studies of a broad range of materials. Proposals are sought which improve predictive capabilities for additional phenomena of interest in nuclear materials impacting their in-reactor performance, extend the capabilities of MARMOT to a broader range of fuel and cladding materials, and improve the validation basis of the code. Examples of additional phenomena of interest include corrosion, creep, chemical interaction, and phase separation in multi-phase, multi-component systems in reactor materials including current and future reactors. Validation should involve closely correlated experiments and modeling using MARMOT, as well as uncertainty quantification. Proposals on atomistic to mesoscale and physics coupling using MARMOT are also encouraged.

NEAMS 1.2 – MACROSCALE FUEL PERFORMANCE (ELIGIBLE TO LEAD: UNIVERSITIES ONLY) (UP TO 3 YEARS AND $800,000)

The NEAMS macroscale fuel performance module BISON provides capabilities for 1-D, 2-D and 3-D predictions of changes in thermal and structural response of nuclear fuel and cladding materials from beginning of life, through irradiation to high burnup, and even including wet and dry storage of used fuel. To date, BISON has primarily focused on LWR fuel (UO2) and cladding materials (zirconium-based alloys), but in principle can be employed for studies of a broad range of nuclear fuel systems. BISON's material and behavior models are being continuously improved through hierarchical and concurrent coupling activities with the MARMOT and through coordination with MARMOT development. NEAMS encourages proposals that aid in the development of theory-based models for material properties and irradiation behaviors, propose more robust and efficient numerical algorithms, extend

PROGRAM SUPPORTING: NUCLEAR ENERGY ADVANCED MODELING AND SIMULATION

capabilities of BISON to relevant fuel forms that are currently under supported or not supported at all, or improve the validation basis of the code, particularly for 3-D problems. Proposals that employ coupling of BISON and MARMOT simulations using hierarchical, concurrent, or hybrid approaches are encouraged.

NEAMS 1.3 – CORE NEUTRONICS
(ELIGIBLE TO LEAD: UNIVERSITIES ONLY)
(UP TO 3 YEARS AND $800,000)

NEAMS' investment in neutronics methods is driven by the need to provide much more detailed spatial and temporal descriptions of reaction rates and isotopic densities to the NEAMS fuels performance modules than can be achieved with more conventional methods. The NEAMS ToolKit uses the PROTEUS neutronics code which provides tools for second order discrete ordinates transport and kinetics. PROTEUS is integrated with ORIGEN for depletion. The MC2-3 code is used in conjunction with PROTEUS for multi-group cross section generation and it requires a whole-core ultrafine-group transport calculation (currently using TWODANT) to obtain realistic region-wise spectra for group condensation.

Recently, capabilities of 3-D MOC transport calculation and thermal cross sections have been added to MC2-3, which still needs significant effort for performance improvement as well as verification and validation. Proposals are sought to improve solution accuracy, computational performance and efficiency, and verification and validation of MC2-3 for various fast and thermal reactor applications, by introducing Monte Carlo approaches, coherent coupling with PROTEUS, efficient parallelization and numerical algorithms, and advanced uncertainty evaluation techniques.

NEAMS 1.4 – THERMAL HYDRAULICS
(ELIGIBLE TO LEAD: UNIVERSITIES ONLY)
(UP TO 3 YEARS AND $800,000)

The NEAMS thermal hydraulics module Nek5000 provides capabilities for high resolution Direct Numerical Simulation (DES), Large Eddy Simulation (LES), Unsteady Reynolds Average Navier-Stokes (URANS) simulation, and reduced order distributed resistance modeling. Proposals are sought which expand the turbulence modeling options available in Nek5000 to improve its applicability and validation basis for liquid-metal coolants in relevant fast reactor fuel assembly geometries.

Modeling of turbulent heat transfer in low-Prandtl fluids such as liquid metals presents unique challenges. The common eddy diffusivity approach has serious limitation for turbulent heat fluxes as has been exposed for higher power density fast reactor designs. With liquid metal coolants with very high thermal conductivity, thickness of the thermal boundary layer is greater than the viscous boundary layer. Recent efforts under the THINS and SESAME European programs have promoted the validation and adoption of more accurate closures such as the algebraic heat flux model for single-phase turbulence in liquid-metal cooled reactors [A. Shams , F. Roelofs, E. Baglietto, S. Lardeau and S. Kenjeres, "Assessment and calibration of an algebraic turbulent heat flux model for low-Prandtl fluids", International Journal of Heat and Mass Transfer, 79,pp. 589–601 (2014)].

This call seeks proposals that build on these efforts by developing and implementing within Nek5000 advanced turbulence models for turbulent heat fluxes in liquid metal fuel assemblies. Priority will be given to proposals that cover unsteady approaches (URANS and Hybrid LES-RANS) in both forced and natural convection. The models should be developed with particular attention to verification/validation using existing experimental or DNS data. Proposals that include development of new tailored DNS datasets are also encouraged (e.g., [Haomin Yuan, Elia Merzari, "Direct Numerical Simulation of Turbulent Channel Flow With Heat Transfer for Low Prandtl and High Reynolds and Comparison With Algebraic Heat Flux Model", ASME/JSME/KSME 2015 Joint Fluids Engineering Conference, Seoul, Korea (2015)]).

PROGRAM SUPPORTING: NUCLEAR ENERGY ADVANCED MODELING AND SIMULATION

NEAMS 1.5 – STRUCTURAL MECHANICS
(ELIGIBLE TO LEAD: UNIVERSITIES ONLY)
(UP TO 3 YEARS AND $800,000)

The NEAMS structural mechanics code Diablo provides capabilities for high-resolution simulation of structural temperatures, strain and stresses, and deformation in large complex structural components using a mix of 2-D and 3-D methods. Diablo also offers diverse options for addressing material-to-material contacts. Proposals are sought which add models to Diablo to enhance its ability to predict the thermo-mechanical response of fast reactor fuel assemblies.

Since core reactivity is sensitive to minor geometric changes in a fast reactor, capturing the gradual distortion (during steady-state irradiation) and transient deformation (during accidents) of the fuel assemblies due to the combined effects of thermal expansion and irradiation-induced swelling and creep are important. Such deformations also impact the design of core restraint system to assure structural integrity against inter-assembly loads and to satisfy the refueling requirements. In traditional approaches such as those employed in the NUBOW-3D code, each hexagonal fuel assembly is represented using a simple beam model, and the cross-sectional distortion mode caused by contact loads is described by independent springs. NEAMS is seeking a more advanced, higher-fidelity approach that resolves the inter-duct contact forces and the cross-sectional distortion effect of each duct (e.g., by representing fuel assemblies as thin shell structures), in order to more accurately calculate the core distortion and the mechanical behavior of fast reactors.

In order to more accurately capture the cross-sectional distortion of hexagonally shaped fuel assembly ducts by contact loads (not only the displacement of an actual contact surface but also the consequent interaction among hexagonal duct walls), new models are needed in in DIABLO to simulate thermal expansion and irradiation-induced swelling and creep of the fuel assembly ducts. Such models will need to account for the coupled stiffness effects as well as the contact load distribution and detailed deformation of each duct wall. Additionally, these modifications to DIABLO must be delivered within a stand-alone core-bowing analysis module, as an add-on capability, so that DIABLO and module development paths can be maintained independently in the future.

Applicability of the new DIABLO models should be demonstrated for a range of conditions from a single duct compaction analysis (simulating the change of duct compaction stiffness for different loading conditions such as the load pad forms and the number of contact faces) to transient deformation of core assemblies during accidents in which the distortion of loading pads have important effects on obtaining favorable reactivity feedback.

NEAMS 1.6 – INTEGRATION AND DEMONSTRATION
(ELIGIBLE TO LEAD: UNIVERSITIES ONLY)
(UP TO 3 YEARS AND $800,000)

To enhance integration of NEAMS tools into a wider range of R&D activities, NEAMS will employ a model and workflow interface called the NEAMS Workbench. This NEAMS Workbench will facilitate the transition from conventional tools to high-fidelity tools by providing a common user interface for model creation, review, execution, and visualization for many codes. The Workbench also provides the ability to run many codes from a common user input by templating engineering scale specifications to code-specific input requirements, enabling multi-fidelity analysis of a system from a common input using a variety of codes. Expansion of the codes integrated under the Workbench as well as the creation of templates for many reactor systems will facilitate the use of NEAMS tools by a broader community.

Proposals are sought to integrate high-fidelity as well as conventional tools into the Workbench, automate analysis workflows used in design studies, provide convenient access to uncertainty quantification, develop and demonstrate templates of complex system models, provide automated meshing, and demonstrate the use of the Workbench for practical studies. Proposals that demonstrate the value of the high-fidelity NEAMS tools as applied to collaborative benchmarks, validation, and industrial systems as well as the use of NEAMS tools to inform the improved use of

PROGRAM SUPPORTING: NUCLEAR ENERGY ADVANCED MODELING AND SIMULATION

conventional tools within the Workbench are strongly encouraged.

SEPARATE EFFECTS IRRADIATION TESTING FOR VALIDATION OF MICROSTRUCTURAL MODELS IN MARMOT (NEAMS 2)
(FEDERAL POC: DAN FUNK & TECHNICAL POC: BRAD REARDEN)
(ELIGIBLE TO LEAD: UNIVERSITIES ONLY)
(NSUF ACCESS REQUEST REQUIRED)
(UP TO 3 YEARS AND $500,000)

Requests are sought for innovative, separate effects irradiation tests of nuclear fuels and/or materials that would provide data important to informing and validating mechanistic, microstructure-based models of fuel behavior under development using MARMOT, the NEAMS tool for simulating microstructure evolution under irradiation. MARMOT models under active development are summarized under NEAMS 1.1 and in the MARMOT Assessment Report. Fuel systems of interest for which separate effects experiments are desired are the LWR fuel system (*i.e.*, both the historic UO_2 fuel and Zirconium-based cladding, as well as emerging Accident Tolerant Fuel concepts) and the SFR fuel system (*i.e.*, U-Zr and U-Pu-Zr metallic fuel and steel-based cladding).

NOTE: Access to NSUF capabilities will require agreement and final signature to the User Agreement (copy provided in Appendix F and at https://atrnsuf.inl.gov/documents/ATRNSUFStandardNon-PropUserAgreement.pdf). **The terms and conditions of the User Agreement are non-negotiable and failure at accept the terms and conditions of the User Agreement will terminate processing and review of the NEAMS-2, NSUF-1, or NSUF-2 applications.** In order to ensure compliance throughout the application review process, applicants must indicate in the LOI that the User Agreement as been read, understood, and the terms and conditions are accepted. Further, submission of a pre-application and a full application indicates the applicant will comply and agree to the terms and conditions of the User Agreement. Upon award of an NSUF supported project, the User Agreement must be signed before activities will begin on the project.

PROGRAM SUPPORTING: NUCLEAR ENERGY

NUCLEAR ENERGY-CYBERSECURITY RESEARCH TOPICS AND METRICS ANALYSES (NE-1)
(FEDERAL POC: TREVOR COOK & TECHNICAL POC: STEVEN HARTENSTEIN)
(ELIGIBLE TO LEAD: UNIVERSITIES ONLY)
(UP TO 3 YEARS AND $800,000)

Nuclear Energy-Cybersecurity Research: Proposals are being sought for research that explores cyber-resistant digital I&C architectures for application in nuclear power generation. Examples of research in this area include advance I&C protocols, communication networks that adapt to cyber threat, architectures that support inspection and forensics, unique application of intelligent integrated circuits, etc. Research should contribute to a science-based portfolio that can be used by industry to develop standards for I&C architectures in nuclear facilities.

MISSION SUPPORTING: NUCLEAR ENERGY

INTEGRAL BENCHMARK EVALUATIONS (MS-NE-1)
(FEDERAL POC: DAN FUNK & TECHNICAL POC: JOHN BESS)
(UP TO 3 YEARS AND $400,000)

The International Reactor Physics Experiment Evaluation Project (IRPhEP) and International Criticality Safety Benchmark Evaluation Project (ICSBEP) are recognized world-class programs that have provided quality-assured (peer-reviewed) integral benchmark specifications for thousands of experiments. The Project produces two annually updated Organization for Economic Co-operation and Development (OECD) Nuclear Energy Agency (NEA) Handbooks that are among the most frequently quoted references in the nuclear industry. Applications are sought, within the scope of these two projects, to provide complete benchmark evaluations of existing experimental data that would be included in IRPhEP and ICSBEP handbooks, and would support current and future R&D activities.

The IRPhEP and ICSBEP Handbooks are the collaborative efforts of nearly 500 scientists from 24 countries to compile new and legacy experimental data generated worldwide. Without careful data evaluation, peer review, and formal documentation, legacy data are in jeopardy of being lost and reproducing those experiments would incur an enormous and unnecessary cost. The handbooks are used worldwide by specialists in reactor safety and design, criticality safety, nuclear data, and analytical methods development to perform necessary validations of computational models. Proposed benchmark evaluations should be of existing experimental data. Measurements of interest include critical, subcritical, buckling, spectral characteristics, reactivity effects, reactivity coefficients, kinetics, reaction-rate and power distributions, and other miscellaneous types of neutron and gamma transport measurements. A growing area of interest includes evaluation of transient benchmark experiment data for light water reactor systems, such as PWRs and BWRs.

All evaluations must be completed according to the requirements, including peer review, in the IRPhEP and the ICSBEP. DOE currently invests tens of millions of dollars each year to develop the next generation of nuclear engineering modeling & simulation tools. These tools need ad-hoc evaluated and quality-assured experimental data for validation purposes and, consequently, benchmark evaluations in support of DOE programs such as, but not limited to, CASL, NEAMS, TREAT, LWRS, FCT and ART are of particular interest to this call. To avoid duplication, please note that there is already an Integrated Research Project IRP-NE-1 awarded in FY15 to prepare one or more TREAT transient testing benchmarks, and an Integral Benchmark Evaluations MS-NE-1 project awarded in FY16 for Molten Salt Reactor Experiment Benchmark Evaluation.

Appendix B: Workscopes for U.S. University-, National Laboratory-, or Industry-led Program Supporting R&D Projects

PROGRAM SUPPORTING: NUCLEAR ENERGY ENABLING TECHNOLOGIES (NEET)

ADVANCED METHODS FOR MANUFACTURING (NEET-1)
(FEDERAL POC – ALISON HAHN & TECHNICAL POC – JACK LANCE)
(ELIGIBLE TO LEAD: UNIVERSITY, NATIONAL LABORATORY, OR INDUSTRY)
(UP TO 3 YEARS AND $1,000,000)

The Advanced Methods for Manufacturing program seeks proposals for research and technology development to improve the methods by which nuclear equipment, components, and plants are manufactured, fabricated, and assembled. The focus and emphasis will be placed on technologies that can be deployed in the near-term. Areas that should be considered are the improvement of plant component manufacturing using innovations like additive manufacturing and innovations in the fabrication of reactor and in-reactor components. Most importantly, reducing the cost and time of manufacturing here in the U.S. for both ALWRs and SMRs is an important goal for any proposed research. Specific goals include:

- Manufacturing innovations that accelerate deployment schedules by at least 6 months compared to current new plant construction estimates;
- Reduce component fabrication costs by 20% or more;
- Increase installation of key subsystems without cost increase or schedule delay.
- The program seeks to develop manufacturing innovation that supports the "factory fabrication" and expeditious deployment of SMR technologies. Potential areas for exploration include:
- Factory and field fabrication techniques that include improvements in manufacturing technologies such as advanced (high speed, high quality) welding technologies, practical (shop floor) applications of electron beam welding for fabricating heavy sections, surface modification and metal spraying techniques that reduce erosion, corrosion and wear on component surfaces.
- Advances in manufacturing processes for reactor plant components reactor internals, fuel cladding and fuel support assemblies. Research could include advanced manufacturing methods for individual components or fabrication of assemblies.
- Details of several areas for innovation can be found in the NEET 2010 Workshop report (http://www.ne.doe.gov/pdfFiles/Neet_Workshop_07292010.pdf).

Through innovation in manufacturing, significant advancements in nuclear technology quality, performance and economic improvements will be achieved. One of the key success criteria for the program is the development of manufacturing methods that will gain acceptance by the appropriate regulatory or standard-setting bodies and licensing for commercial nuclear plant deployment.

ADVANCED SENSORS AND INSTRUMENTATION (NEET-2)
(FEDERAL POC – SUIBEL SCHUPPNER & TECHNICAL POC – BRUCE HALLBERT)

The Advanced Sensors and Instrumentation program seeks applications for innovative sensors and instrumentation for use in the nuclear industry and research facilities. They should demonstrate greater accuracy, higher resolution, and be appropriately sized and fitted for the intended nuclear environment than instruments in use today for making similar measurements, where applicable. They should provide improved measurement capabilities for characterizing a targeted parameter or behavior of interest, provide the capability to quantify measurement uncertainty, and address the issue of potential use of the technology in the targeted operational environment. The proposal should indicate whether and how the proposed technology is or may be applicable to multiple reactors or fuel cycle applications, i.e. crosscutting, and how it could support the Gateway for Accelerated Innovation in Nuclear (GAIN) Initiative. As an example, recent Molten Salt and Fast Reactor technology specific workshops organized by GAIN indicated a need for development of sensors and instrumentation capable of measuring properties in opaque coolants and very high temperature coolants

PROGRAM SUPPORTING: NUCLEAR ENERGY ENABLING TECHNOLOGIES (NEET)

representative of these reactor technologies. Particular to MSR technology, a very challenging and important issue is the ability to measure local chemical composition in real time at critical locations.

NEET-2.1: EMBEDDED / INTEGRATED SENSORS IN COMPONENTS AND FUNCTIONAL MATERIALS (ELIGIBLE TO LEAD: UNIVERSITY, NATIONAL LABORATORY, OR INDUSTRY) (UP TO 3 YEARS AND $1,000,000)

Proposals are sought that develop and demonstrate the capability for embedding or integrating sensors into components or functional materials as a part of the integral design of a functional component or device. The goal of embedded and integrated design is to improve system performance by removing control loops that add data transmission, processing, and actuation time to current process control approaches in monitoring and controlling a component or system. The purpose of embedding and integrating sensors and control components is to demonstrate improved performance and reliability. Successful application of research to an application will require testing and demonstration, including a description of system metrics that are targeted through sensor and control integration / embedding, and resulting anticipated system performance improvements.

NEET-2.2: 3-D SENSOR NETWORKS FOR PASSIVE STRUCTURAL SYSTEM MONITORING OF CRITICAL MATERIALS IN NUCLEAR ENERGY SYSTEMS (ELIGIBLE TO LEAD: UNIVERSITY, NATIONAL LABORATORY, OR INDUSTRY) (UP TO 3 YEARS AND $1,000,000)

Passive structures, systems, and components constitute a vital aspect of nuclear energy system structural integrity and are key to the safe operation of these systems. Critical materials in nuclear energy systems include concrete that serve as structural support and primary containment of nuclear materials, metals that serve as pressure boundaries, cable insulation, spent fuel storage cask media, and others that are vital and pervasive and will continue to be so in commercial nuclear energy systems. Monitoring structural materials is a key aspect of the safe operation of nuclear facilities. Proposals are sought for 3-D sensor networks for monitoring passive structural systems with an emphasis on monitoring critical material performance of those systems. This includes the ability to collect data from these materials that are relevant to the performance of those materials over time, that relate to the major performance attributes of interest, the known modes of aging and degradation, and include diagnostic and prognostic models of material behavior in target environments of interest. Successful applicants must be capable of demonstrating a 3-D sensor network in a representative target environment of interest during the performance period of the project and demonstrate data collection, diagnostics, and prognostics within the stated goals and objectives of the project.

NEET-2.3: DEVELOPMENT OF ADVANCED TRANSIENT IRRADIATION INSTRUMENTATION (ELIGIBLE TO LEAD: UNIVERSITY, NATIONAL LABORATORY, OR INDUSTRY) (UP TO 3 YEARS AND $1,000,000)

Transient irradiation of nuclear fuel samples is performed to identify fuel performance limitations. Of particular interest is testing conducted on pre-irradiated fuel samples because the end-of-life performance limits typically dominate fuel design. Due to the difficulty of this type of test, advanced instrumentation is normally deployed to maximize the data collected from each test. Instrumentation typically focuses on time-resolved monitoring of the thermal condition of the fuel pin and its surrounding coolant and the deformation of each component of the fuel pin. The ability to use high fidelity instruments positioned in the specific location of interest is impaired by the need to avoid disturbing the conditions of the fuel pin (i.e. by weakening the cladding by spot welding a thermocouple or puncturing a pin to insert a plenum pressure transducer), the degraded state of the fuel pin after irradiation (i.e. oxide formation on the cladding surface), and the need to remotely apply the instrument in a hot cell. Proposals are sought for advanced sensors and instruments and the development of techniques for applying them in a remote environment for transient experiments. Successful applicants must propose and design a sensor (and any necessary corresponding instrumentation) to be qualified

PROGRAM SUPPORTING: NUCLEAR ENERGY ENABLING TECHNOLOGIES (NEET)
and deployed for the TREAT reactor in support of transient testing of nuclear fuel samples.

PROGRAM SUPPORTING: NUCLEAR SCIENCE USER FACILITIES (NSUF)

NUCLEAR ENERGY-RELATED R&D SUPPORTED BY NUCLEAR SCIENCE USER FACILITIES CAPABILITIES (NSUF-1)
(FEDERAL NSUF POC: ALISON HAHN & TECHNICAL NSUF POC: RORY KENNEDY)
(ELIGIBLE TO LEAD: UNIVERSITY, NATIONAL LABORATORY, OR INDUSTRY)
(UP TO 3 YEARS AND $500,000)

NOTE: NEAMS-2: Separate Effects Irradiation Testing For Validation of Microstructural Models In Marmot requires NSUF access but can only be led by universities. That workscope can be found on page 74.

This workscope solicits applications for nuclear energy-related research projects focused on the topical areas described below. It is intended that these focused topical areas will change with each future CINR FOA. The focused topical areas are selected by NE's R&D programs (e.g. Nuclear Reactor Technologies, Fuel Cycle Technologies, and Nuclear Energy Enabling Technologies) with the explicit purpose to leverage the limited R&D funding available with access to NSUF capabilities. All applications submitted under this workscope will be projects coupling R&D funding with NSUF access. Projects requiring "NSUF access only" (see NSUF-2 below) or "R&D funding only" must be submitted under other appropriate workscopes. Applications submitted under this workscope must support the Department of Energy Office of Nuclear Energy mission. Information regarding the current Nuclear Energy R&D Roadmap as well as specific research areas can be found at http://energy.gov/ne/mission. Capabilities available through the NSUF can be found on the website at nsuf.inl.gov.

As part of this FOA, NSUF provides no-cost access to unique nuclear energy R&D infrastructure in the areas of irradiation, post irradiation examination, and beamline experiments; thus enabling research in critical areas as described below. As introduced last year, NSUF continues to offer in this FOA access to High Performance Computing capabilities and applications coupling experimentation to computational modeling and simulation are encouraged. Successful applications will have demonstrated that the proposed research will produce High Impact results. Criteria to demonstrate High Impact research will include 1) the project's ability to validate and verify (V&V) developed or developing models (see Appendix D on V&V needs); 2) the project's potential to lead to or uncover new mechanisms, models, or theoretical understanding; 3) the project's ability to solve specifically identified pressing issues recognized by industry and/or NE R&D programs within the proposed workscope.

Note: All projects awarded under NSUF-1 are categorized as mission supporting and will have an R&D component that is complemented by the unique capabilities of NSUF. The R&D portion of NSUF-1 projects cannot exceed $500,000 and a 3-year duration (see Part II, Section C). However, since NSUF supported projects involving reactor neutron irradiation may be up to 7 years in duration, flexibility in R&D funding distribution can be established to accommodate actual resource allocation requirements, i.e., a 3-year research effort may be planned across a longer period of performance to accommodate breaks in R&D activities during NSUF support periods. The 7 year duration NSUF projects are limited to irradiation plus PIE projects (approximately 1 year for design and fabrication, 2-2 1/2 years irradiation, 1/2 year to cool and ship, up to 3 years PIE). The PIE phase for all NSUF projects is limited to a maximum of 3 years in duration and $750,000 in cost.

All materials and samples must be available at the time of full application submittal unless proof can be given that the process to fabricate samples is already well established and the equipment and resources are available on demand such that samples are available approximately five months after project initiation. NSUF will not support preliminary fuels, materials, and instrumentation development work, i.e. development must be at irradiation testing stage. Projects whose relevancy is based solely or primarily on fusion energy needs will not be considered. Applications must include list of publications that resulted from previous NSUF supported projects including projects awarded through both the CINR FOA and Rapid Turnaround Experiments calls. See NOTE at the bottom of this section.

PROGRAM SUPPORTING: NUCLEAR SCIENCE USER FACILITIES (NSUF)

NSUF 1.1 - NUCLEAR REACTOR TECHNOLOGIES
NSUF 1.1A: NEUTRON RADIATION ASSESSMENT OF ADVANCED ALLOYS FOR LWR CORE INTERNALS
(FEDERAL POC: RICHARD REISTER & TECHNICAL POC: KEITH LEONARD)
(ELIGIBLE TO LEAD: UNIVERSITY, NATIONAL LABORATORY, OR INDUSTRY)
(UP TO 3 YEARS AND $500,000)

Long-term operation of existing nuclear reactor core internals impose significant materials challenges that include high fluence radiation-induced changes, interaction with reactor coolants, stress and elevated temperature exposure to structural materials. This produces significant challenges to the traditional nuclear materials such as type 304 and 316 stainless steels. Advanced alloys with superior radiation resistance have the potential to increase safety margins, design flexibility, and economics for not only the long-term operation of the existing fleet but also in new plant construction. The Electric Power Research Institute (EPRI) teamed up with the Department of Energy (DOE) to initiate the Advanced Radiation Resistant Materials (ARRM) program, aiming to develop and test degradation resistant alloys from current commercial alloy specifications by 2021 to a new advanced alloy with superior degradation resistance by 2024 in light water reactor (LWR)-relevant environments. Assessment of fundamental materials properties has been performed on several down selected alloy types. Proposals are sought to examine the neutron irradiation effects on mechanical (tensile, impact and fracture toughness), dimensional stability, and irradiation assisted stress corrosion cracking performance under LWR relevant conditions. Alloys of interest include ferritic alloys Grade 92, A439, and 14YWT, austenitic alloy 800, and Ni base alloys 625 and 725. See NOTE at the bottom of this section.

NSUF 1.1B: SYNERGISTIC RADIATION AND THERMAL AGING EFFECTS ON CAST AUSTENITIC STAINLESS STEEL
(FEDERAL POC: RICHARD REISTER & TECHNICAL POC: KEITH LEONARD)
(ELIGIBLE TO LEAD: UNIVERSITY, NATIONAL LABORATORY, OR INDUSTRY)
(UP TO 3 YEARS AND $500,000)

The coolant system of a LWR consists of a large number of components and piping networks made of cast austenitic stainless steels (CASS). Relatively few critical degradation modes of concern are expected within the current operating license. However, the integrity of CASS components beyond 60 years is of interest to the LWRS program due to the limited database for accelerated aging and experience analyzing ex-service components from which predictions can be made. Current work within the LWRS program is looking at long term thermal aging effects on mechanical and fracture toughness properties as well as microstructural development supported by modeling predictions. Proposal are sought to continue to develop the scientific assessment of CASS performance through the investigation of long-term materials performance subjected to both thermal and irradiation conditions. Proposal might address the synergistic effects of combined irradiation and thermal aging on microstructural development, mechanical properties including fracture toughness effects, and the determination if thermal effects dominate property changes over a certain fluence range. See NOTE at the bottom of this section.

NSUF 1.2 - NUCLEAR ENERGY ENABLING TECHNOLOGIES
NSUF 1.2A: ADVANCED MANUFACTURING OF INSTRUMENTATION FOR IN-PILE MEASUREMENT AND CHARACTERIZATION OF NUCLEAR FUELS AND MATERIALS
(FEDERAL POC: SUIBEL SCHUPPNER & TECHNICAL POC: BRUCE HALLBERT)
(ELIGIBLE TO LEAD: UNIVERSITY, NATIONAL LABORATORY, OR INDUSTRY)
(UP TO 3 YEARS AND $500,000)

Proposals are sought that develop and demonstrate new methods and technologies for developing sensors using advanced manufacturing techniques that can be qualified and applied to applications of measurement and characterization of fuels and material behavior during irradiation in-pile. Research is sought that is capable of

PROGRAM SUPPORTING: NUCLEAR SCIENCE USER FACILITIES (NSUF)

producing fully functional sensors using advanced manufacturing that are sufficiently mature to enable irradiation testing of the resulting design in irradiation facilities up to and potentially including in-pile applications. Successful application of the research to an in-pile application or an irradiation test program must be addressed in the proposal. See NOTE at the bottom of this section.

NSUF 1.2B: DEVELOPING AND TESTING ADVANCED MATERIALS AND ADVANCED SENSORS THROUGH IN-PILE TESTS.
(FEDERAL POC: SUIBEL SCHUPPNER & TECHNICAL POC: BRUCE HALLBERT)
(ELIGIBLE TO LEAD: UNIVERSITY, NATIONAL LABORATORY, OR INDUSTRY)
(UP TO 3 YEARS AND $500,000)

Proposals are sought in two areas that support development of advanced materials for sensors and for development of advanced sensors themselves through in-pile testing and post-irradiation examinations. 1) Advanced Materials for Sensors. Research is sought that supports breakthrough developments in materials used for sensors for monitoring, controlling, and communicating in nuclear energy system applications through irradiation testing and post irradiation examination of candidate materials proposed for advanced sensors. Successful applications will include: a description of the materials; irradiation and post irradiation examination needs; the role of the materials in new sensors, controls, communications or associated applications. 2) Advanced Sensors. Research is also sought that supports development and testing of advanced sensors and associated instrumentation for nuclear energy applications through irradiation and post irradiation examination of sensors and associated instrumentation. Successful applications will include: a description of the sensor and associated instrumentation and materials requiring irradiation and post irradiation examination; irradiation and post irradiation examination needs; and the purpose and application of the developed sensor in nuclear energy systems.

NSUF 1.2C: IRRADIATION TESTING OF MATERIALS PRODUCED BY INNOVATIVE MANUFACTURING TECHNIQUES
(FEDERAL POC – ALISON HAHN & TECHNICAL POC – RORY KENNEDY)
(ELIGIBLE TO LEAD: UNIVERSITY, NATIONAL LABORATORY, OR INDUSTRY)
(Up to 3 years and $500,000)

Products from advanced and innovative manufacturing techniques that offer lower cost and higher performance can be proposed for irradiation testing to demonstrate performance. Coupling to modeling mechanisms predicting performance enhancements is encouraged. Of particular interest are techniques associated with joining SiC cladding components (e.g., end caps to tubes).

NSUF-1.3: ADVANCED MATERIAL TECHNOLOGIES DEVELOPMENT
(FEDERAL POC – SUE LESICA & TECHNICAL POC – STUART MALOY)
(ELIGIBLE TO LEAD: UNIVERSITY, NATIONAL LABORATORY, OR INDUSTRY)
(UP TO 3 YEARS AND $500,000)

Oxide Dispersion Strengthened Steel Joining Technologies

Proposals are sought to develop advanced joining techniques for oxide dispersion strengthened (ODS) metal alloys for high dose (>250 dpa), nuclear fission reactor applications. The mechanical properties of ODS metal alloys in nuclear environments are a significant improvement to the properties of conventional steels. ODS alloys exhibit higher radiation resistance and improved high temperature strength and creep properties. However, one of the primary challenges for the use of ODS alloys in engineering applications is the difficulty in maintaining the oxide dispersions in welds. Therefore, it is necessary to develop advanced joining techniques for these alloys. Proposals should include testing and characterization of joined plates or tubes of ODS alloys, both before and after irradiation, to understand and mitigate the effects of residual stress at or near the heat affected zones and to

PROGRAM SUPPORTING: NUCLEAR SCIENCE USER FACILITIES (NSUF)
characterize the phase stability at the joint. These advanced joining techniques must maintain or improve mechanical properties at the joint, such as strength, irradiation resistance, corrosion resistance, and creep. Innovative methods to control and understand residual stress, heat affected zones, and/or phase stability during joining are also of interest. **NOTE:** Access to NSUF capabilities will require agreement and final signature to the User Agreement (copy provided in Appendix F and at https://atrnsuf.inl.gov/documents/ATRNSUFStandardNon-PropUserAgreement.pdf). The terms and conditions of the User Agreement are non-negotiable and failure to accept the terms and conditions of the User Agreement will terminate processing and review of the NEAMS-2, NSUF-1, or NSUF-2 applications. In order to ensure compliance throughout the application review process, applicants must indicate in the LOI that the User Agreement has been read, understood, and the terms and conditions are accepted. Further, submission of a pre-application and a full application indicates the applicant will comply and agree to the terms and conditions of the User Agreement. Upon award of an NSUF supported project, the User Agreement must be signed before activities will begin on the project.

PROGRAM SUPPORTING ACCESS ONLY: NUCLEAR SCIENCE USER FACILITIES (NSUF)

NUCLEAR SCIENCE USER FACILITIES ACCESS ONLY (NSUF-2)
(FEDERAL POC: ALISON HAHN & TECHNICAL POC: RORY KENNEDY)
(ELIGIBLE TO LEAD: UNIVERSITY, NATIONAL LABORATORY, OR INDUSTRY)

Applicants interested in utilizing Nuclear Science User Facilities (NSUF) capabilities only should submit "access only" applications under this workscope. Applications must support the Department of Energy Office of Nuclear Energy's mission. Information regarding the current Nuclear Energy Research and Development Roadmap as well as specific research areas can be found at http://energy.gov/ne/mission. Capabilities available through the NSUF can be found on the website at nsuf.inl.gov.

NSUF provides access to unique nuclear energy R&D infrastructure in the areas of irradiation, post irradiation examination and beamline experiments; thus enabling research in critical areas as described below. New to this FOA, NSUF offers access to High Performance Computing capabilities and applications coupling experimentation to computational modeling and simulation are encouraged. Successful applications will have demonstrated that the proposed research will produce High Impact results. Criteria to demonstrate High Impact research will include 1) the project's ability to validate and verify (V&V) developed or developing models (see Appendix D on V&V needs); 2) the project's potential to lead to or uncover new mechanisms, models, or theoretical understanding; 3) the project's ability to solve specifically identified pressing issues recognized by industry and/or NE R&D programs within the proposed workscope.

All applications submitted under this workscope must identify the R&D funding source, scope, and duration associated with the requested "NSUF access only" scope. All materials and samples must be available at time of full application submittal unless proof can be given that the process to fabricate samples is already well established and the equipment and resources are available on demand such that samples are available approximately five months after project initiation. NSUF will not support preliminary fuels, materials, and instrumentation development work, i.e. development must be at irradiation testing stage. Projects whose relevancy is based solely or primarily on fusion energy needs will not be considered. Applications must include list of publications that resulted from previous NSUF supported projects including projects awarded through both the CINR FOA and Rapid Turnaround Experiments calls.

The 7-year duration NSUF projects are limited to irradiation plus PIE projects (approximately 1 year for design and fabrication, 2-2 1/2 years irradiation, 1/2 year to cool and ship, up to 3 years PIE). The PIE phase for all NSUF projects is limited to a maximum of 3 years in duration and $750,000 in cost.

Core and Structural Materials

This element is primarily focused on understanding material aging and degradation mechanisms (e.g. fatigue, embrittlement, void swelling, fracture toughness, IASCC processes and mitigation), developing alternate and/or radiation resistant materials for application in current and future fission reactors, and materials from alternate or advanced manufacturing techniques. Proposed projects may involve R&D in the areas of material irradiation performance and combined effects of irradiation and environment on materials. Projects whose relevancy is based solely or primarily on fusion energy needs will not be considered.

Nuclear Fuel Behavior and Advanced Nuclear Fuel Development

This program element is primarily focused on increasing our fundamental understanding of the behavior of nuclear fuels (including cladding) in reactor and research and development activities for advanced nuclear fuels and improving the performance of current fuels. Areas of interest include irradiation and thermal effects on microstructure development and the effects on, for example, thermophysical and thermomechanical properties as well as chemical interactions. Advanced fuels applicability extends to fast spectrum transmutation systems, coated particle fuels for high-temperature reactor systems, and robust fuels for light water reactors including accident tolerant fuels. Activities should be aimed at irradiation experiments and post irradiation examination that investigate fundamental aspects of fuel performance such as radiation damage, amorphization, fuel restructuring, species

PROGRAM SUPPORTING ACCESS ONLY: NUCLEAR SCIENCE USER FACILITIES (NSUF)

diffusion and migration, and fission product behavior. Separate effects testing focused on specific V&V issues (Appendix D) are encouraged.

Advanced In-reactor Instrumentation

This program element includes development of advanced in-reactor instrumentation for characterization of materials under irradiation in test reactors and for on-line condition monitoring in power reactors. Applications should address the development of radiation resistant sensors for measurement of thermal conductivity, dimensional changes (specifically diameter and volume), crack propagation in materials, and internal fission gas release, composition, and pressure. Development of practical techniques that are non-intrusive with respect to irradiation specimens is encouraged, as are concepts that examine the feasibility and practical use of nontraditional methods such as optical fibers and ultrasonic techniques as well as other incorporated wireless transmission techniques. Proposals that also support the GAIN initiative, such as those involving development of advanced instrumentation, sensors, and measurement techniques for use in advanced reactors including molten salt reactors, sodium cooled fast reactors, lead cooled fast reactors, or high temperature gas reactors are encouraged. For MSR with dissolved fuel, and important and challenging problem is the ability to measure local chemical composition in real time at critical locations.

Experiments with Synchrotron Radiation

Proposed research includes the use of facilities at the Materials Research Collaborative Access Team (MRCAT) beamline located in the Advanced Photon Source Facility at Argonne National Laboratory (ANL) and, new to this year's FOA, the X-ray Powder Diffraction (XPD) beamline at the National Synchrotron Light Source – II (NSLS-II) facility at Brookhaven National Laboratory (BNL). Proposals requesting the use of these facilities should focus on post-irradiation examination or concurrent use with ongoing irradiations by NSUF. Experiments conducted at MRCAT will be facilitated by the Illinois Institute of Technology that can include x-ray diffraction (XRD), x-ray absorption (XAS), x-ray fluorescence (XRF), and 5 µm spot size fluorescence microscopy. Experiments conducted at the NSLS-II XPD will be facilitated by the Nuclear Science and Technology Department at BNL.

Research Areas for Experiments with Synchrotron Radiation - The research areas listed here represent promising applications of synchrotron x-ray techniques in characterizing microstructural evolution and associated physical and mechanical properties of materials under irradiation.

- Fundamental Aspects of Radiation Damage
- Phase Stability and Phase Transformation under Irradiation
- Surfaces and Grain Boundaries in Irradiated Materials
- Deformation and Fracture of Irradiated Materials
- Physics and Chemistry of Nuclear Fuels

NOTE: Access to NSUF capabilities will require agreement and final signature to the User Agreement (copy provided in Appendix F and at https://atrnsuf.inl.gov/documents/ATRNSUFStandardNon-PropUserAgreement.pdf). The terms and conditions of the User Agreement are non-negotiable and failure at accept the terms and conditions of the User Agreement will terminate processing and review of the NEAMS-2, NSUF-1, or NSUF-2 applications. In order to ensure compliance throughout the application review process, applicants must indicate in the LOI that the User Agreement has been read, understood, and the terms and conditions are accepted. Further, submission of a pre-application and a full application indicates the applicant will comply and agree to the terms and conditions of the User Agreement. Upon award of an NSUF supported project, the User Agreement must be signed before activities will begin on the project.

Appendix C: Workscopes for U.S. University-led Program Directed Integrated Research Project (IRP) R&D

PROGRAM DIRECTED: FUEL CYCLE TECHNOLOGIES

MODELING OF SPENT FUEL CLADDING IN STORAGE AND TRANSPORTATION ENVIRONMENTS (IRP-FC-1)
(FEDERAL POC – JC DE LA GARZA & TECHNICAL POC – MIKE C. BILLONE)
(ELIGIBLE TO LEAD: UNIVERSITIES ONLY)
(UP TO 3 YEARS AND $3,000,000)

BACKGROUND

The DOE/NE Used Fuel Disposition Storage and Transportation R&D campaign is supporting the development of the technical basis to address fuel integrity issues associated with the long term storage and subsequent transportation of commercial LWR spent nuclear fuel. Since 2009, this program has focused on the four main cladding types for PWR fuel; Zry-4, low tin Zry-4, ZIRLO, and M5. Emphasis has been on development of experimental data to investigate basic cladding material properties and behavior, as well as for benchmarking computer codes. Data that has been acquired by this program through experimental work and open-literature publications include basic elastic data (Young's modulus, Poisson's ratio), plastic data (yield and ultimate tensile strength, uniform and total elongation), as well as Ductile to Brittle Transition Temperatures, hydride effects on cladding strength and ductility, cladding/fuel system effective stiffness parameter (EI), and bending fatigue strength. Recognizing that this emphasis captures a majority of the fuel used in the U.S. fleet, it still has not addressed all the fuel of interest. In particular, work has not been done on BWR fuel cladding (Zr-lined Zry-2), Integrated Fuel Burnable Absorber (IFBA) PWR fuel, or newer cladding alloys (e.g., Optimized ZIRLO for PWRs and ZIRON for BWRs). Because collection of this type of data is very expensive and time consuming, there is a need to develop a benchmarked modeling capability to assess spent fuel performance in the long term storage and transportation environments for other fuel/cladding types. Separate effects tests are also needed for benchmarking specific models in the fuel-performance code.

STATEMENT OF WORK

Computer modeling and simulation needs to be developed to assess the performance of commercial spent nuclear fuel under long-term storage and transportation conditions. This modeling needs to assess hydride behavior in spent fuel cladding when the fuel goes through drying during the pool to dry storage transfer operations (i.e., hydride reorientation), pellet-clad interaction and pellet-pellet connectivity benefits in adding stiffness and strength to the fuel rod, and resistance to beam loadings to individual fuel rods and assemblies in the as-irradiated and dry condition. Basic tasking falls into three general categories:

1. Evaluate existing data base, particularly for hydrogen dissolution/precipitation and perform separate effects tests, as needed, designed to support model development/benchmarking
2. Benchmark code to existing data
   In the development of code, benchmark the code to existing spent PWR fuel data, as described above, to assess the validity of the code results to actual fuel conditions and responses to applied mechanical loads. This includes separate-effects data generated in this program.

3. Use the benchmarked code to assess spent fuel performance behavior to BWR, IFBA, and other cladding types in the U.S. fleet.

Code development can be based on existing codes (e.g., FRAPCON) that are modified to meet the needs of this SOW or can be completely new codes that are created to address this specific SOW. When estimating spent fuel performance behavior to spent fuel without empirical data, benchmarking of results will need to be assessed using other independent codes or through data accumulated using separate effects tests. Provisions must be made for benchmarking codes to this specific application when data do not exist.

PROGRAM DIRECTED: FUEL CYCLE TECHNOLOGIES

WORK TO BE PERFORMED

Activities relevant to model development and supporting testing program needs to include, but are not limited to the following:

- **Hydrogen dissolution/precipitation data**
  Data are available for hydrogen dissolution/precipitation for non-irradiated Zr, Zry-2, and Zry-4. The data collected using diffusion couples (Kammenzind et al. and Kearns) for hydrogen contents >50 wppm are not consistent with data collected using Differential Scanning Calorimetry (McMinn et al.) for hydrogen contents <50 wppm. Also, these data bases do not include Nb-bearing alloys such as ZIRLO and M5. Include Canadian data for Zr-2.5 Nb to determine if this alloying element has an effect on dissolution/precipitation. Determining if additional tests need to be performed to resolve these issues.
- **Effects of cold-work (i.e. texture) on hydrogen precipitation under stress**
  Data generated to date indicate that recrystallized annealed (RXA) alloys (Zry-2 and M5) are more susceptible to precipitating radial hydrides than cold-worked (CW) stress-relieve annealed (SRA) alloys (e.g., Zry-4 and ZIRLO). However, ZIRLO has exhibited a higher susceptibility than Zry-4. It has been postulated that differences are due to the final heat treatment and residual CW for the two alloys. To resolve this, separate effects tests need to be conducted with Zry-4 and ZIRLO in the RXA condition, the as-received SRA condition and as a function of CW (10% to 50%). These would be non-irradiated/pre-hydrided samples cooled slowly (≤5°C/h) from 300−400°C under constant or decreasing hoop stress ≤90 MPa for standard fuel rod designs.
- **Effects of hydrogen content**
  At some total hydrogen level or total hydrogen in solution (e.g., <60 wppm), radial hydrides appear to lack enough continuity in the axial direction to embrittle cladding. High-burnup (HBU) M5 with 60 wppm is very ductile (DBTT <20°C) following slow cooling from peak conditions of 400°C/90-MPa. However, M5 with 80 wppm is brittle at ≤70°C following cooling from more benign conditions of 350°C/87-MPa. Using non-irradiated/pre-hydrided samples, conduct separate effects tests to determine the effects of hydrogen content (60 to 120 wppm) on axial connectivity/spacing of radial hydrides in RXA M5 or Zry-2 following slow cooling from a peak or constant hoop stress of ≤90 MPa.

TASKS TO BE PERFORMED

- **Task 1:** Develop a detailed plan for conducting the work outlined above with any additional activities proposed. (Note: a preliminary plan is expected to be part of the initial proposal)
- **Task 2:** Conduct the study to develop the hydrogen dissolution/precipitation data needed. Technical challenges and limitations in the data development should be addressed.
- **Task 3:** Study the effects of cold-work on hydrogen precipitation under stress. Any innovative approaches to modeling and benchmarking should be addressed.
- **Task 4:** Conduct a separate effects study to assess the effects of hydrogen on cladding behavior.
- **Task 5:** Any additional testing proposed will be addressed in this task.
- **Task 6:** Development of models supporting data developed for hydride formation and associated long-term effects.

DELIVERABLES

- **Detail Study Plan**
  Within the first two months of the IRP a detailed plan with activities and reports' schedule should be provided to the DOE project manager.
- **Topical Reports**
  For each of the technical activities topical reports need to be developed to demonstrate significant contribution to the knowledge base.
- **Progress Reports**
  Quarterly Reports, Annual Progress Reports outlining key accomplishments and progress to date shall

PROGRAM DIRECTED: FUEL CYCLE TECHNOLOGIES

be submitted. These reports will also list any technical publications prepared during the reporting period.

- **Final Report**
  Three months prior to the completion of the project, a draft final report will be submitted to the DOE that summarizes the body of work accomplished and describes the sufficiency of the studies to address long-term risk informed issues of storage and transportation. A final report will be prepared and submitted after incorporating any technical review comments.

NEXT-GENERATION THERMODYNAMIC DATA DEVELOPMENT AND ANALYSIS FOR NUCLEAR WASTE REPOSITORY PERFORMANCE ASSESSMENT AND DECISION MAKING (IRP-FC-2)
(FEDERAL POC – JC DE LA GARZA & TECHNICAL POC – MAVRIK ZAVARIN)
(ELIGIBLE TO LEAD: UNIVERSITIES ONLY)
(UP TO 4 YEARS AND $3,000,000)

INTRODUCTION

In order to assess the safety of a nuclear waste repository, it is essential to effectively predict the eventual migration of its radiologic components into the environment. Numerical modeling of processes affecting the behavior of radionuclides in natural and man-made systems is an integral part of a radiological safety assessment when designing and implementing a nuclear waste repository. Some of the basic information necessary for numerical modeling of these processes is provided by speciation calculations based on thermodynamic data. The value of geochemical modeling as a predictive tool is strongly dependent on the quality of the thermodynamic data that is used and the nature and scope of the thermodynamic database used to perform these chemical speciation calculations.

BACKGROUND

The comprehensive and strict methodologies needed to develop a rigorous and internationally accepted thermodynamic database are exemplified by the Nuclear Energy Agency (NEA) Thermochemical Database Project (TDB) (https://www.oecd-nea.org/dbtdb/). The goal of the NEA-TDB is to make available a comprehensive, internally-consistent, quality-assured and internationally-recognized chemical-thermodynamic-database of selected chemical elements in order to meet the specialized modeling requirements for safety assessments of nuclear waste disposal systems. The NEA-TDB project aims to produce a database that:

(1) contains data for all the elements of interest in radioactive waste disposal systems
(2) documents the sources of experimental data used
(3) is internally-consistent
(4) addresses all solids and aqueous species of interest for nuclear waste storage performance assessment calculations

Although the NEA-TDB effort is impressive, it nonetheless has a number of shortcomings:

- It is aimed principally at radionuclides and a few other elements that are present in nuclear materials or disposal packages.
- It largely excludes natural minerals and many aqueous species that may be present and that may impact potential disposal sites.
- It focuses on thermodynamic data for conditions of 25°C and 1 bar pressure with only limited attention to other temperatures and pressures relevant to deep geological repositories.
- It makes some progress in regard to the treatment of high ionic strength systems, but it is limited mainly to low temperature-pressure salt repositories.

High ionic strength solutions may also be found in deep geological repositories in other rock types. Additional processes relevant to nuclear waste disposal such as kinetics and sorption (surface complexation and ion exchange) are not considered in the NEA-TDB project. Surface complexation and ion exchange are major processes controlling

PROGRAM DIRECTED: FUEL CYCLE TECHNOLOGIES

radionuclide migration but have not been integrated with any traditional thermodynamic database program(s) (including the NEA-TDB).

Thermodynamic databases are often limited and do not span the range of conditions that may exist under the various generic repository scenarios being explored by the DOE-NE program (salt, deep borehole, etc.). The NEA-TDB project, alone, will not satisfy the needs of the DOE-NE program. Thus, numerical modeling capabilities available to DOE are deficient with respect to certain repository designs. Furthermore, new data available in the literature, database revisions performed by the NEA-TDB project and other thermodynamic database projects are not necessarily integrated for use in DOE numerical modeling and safety assessment calculations. Thus, there is a crucial need for advances in thermodynamic data collection, database development, and database integration for use in the various generic repository scenarios (and associated safety assessment calculations) being considered by the DOE-NE program.

The need to develop self-consistent surface complexation/ion exchange databases, in concert with classical thermodynamic databases, for nuclear waste repository performance assessment was expressly identified by the NEA. However, the best path forward for developing such databases remains an open question. One promising effort is the development of the open source RES³T database of surface complexation constants (https://www.hzdr.de/db/res3t.login). The intent of the RES^3T database is to substitute the present K_d approach in risk assessment studies to the more realistic description of sorption phenomena. However, reaction constants supplied in the RES^3T database are inherently dependent on specific surface complexation models adopted in the referenced documents and the associated ancillary data (protonation/deprotonation constants, surface areas, site densities, etc.). Furthermore, each constant was developed in conjunction with aqueous speciation data that may now be considered outdated. A practical mechanism by which surface complexation and ion exchange constants can be updated to provide consistency with the latest aqueous speciation databases does not exist. The inconsistent application of surface complexation models in the literature and the lack of a comprehensive radionuclide sorption database limit the ability of DOE-NE to apply thermodynamic modeling to safety assessment calculations.

WORK TO BE PERFORMED

Thermodynamic data collection and database development needs include, but are not limited to, the following:

- Develop new approaches to update historical US databases (e.g. SUPCRT92, OBIGT (http://www.chnosz.net/)).
- Integrate US databases with internationally recognized datasets (e.g. NEA-TDB, THEREDA, etc.) for use in US-specific repository scenarios (i.e. salt, deep borehole, etc.)
- Develop methodologies for quality assessment (QA), uncertainty quantification (UQ), and benchmarking of databases.
- Develop international collaborations to compare and benchmark databases used in repository assessment (e.g. NEA-TDB, THEREDA, etc.)
- Perform experiments to populate thermodynamic data and/or resolve discrepancies that are critical to repository performance assessment.
- Address known limitations in thermodynamic data and databases at high ionic strength conditions relevant to salt repositories.
- Identify and implement approaches to integrate surface complexation and ion exchange processes into traditional thermodynamic databases.

TASKS TO BE PERFORMED

- **Task 1:** Develop a methodology to enhance and update historical US thermodynamic databases (e.g. SUPCRT92, OBIGT).
- **Task 2:** Integrate US databases with other international efforts (e.g. NEA-TDB, THEREDA, etc.) to enhance predictive capabilities for US-specific repository scenarios.

PROGRAM DIRECTED: FUEL CYCLE TECHNOLOGIES

- **Task 3:** Develop new approaches to uncertainty quantification (UQ) in thermodynamic databases that can be applicable to performance assessment of US nuclear waste repository scenarios.
- **Task 4:** Identify database limitations for particular US nuclear waste repository scenarios (e.g. deep borehole, salt, etc.) and provide new experimental data to reduce performance assessment uncertainties.
- **Task 5:** Develop novel methodologies for parameterization of surface complexation, ion exchange, and other retardation processes for use in performance assessment and reactive transport modeling
- **Task 6:** Develop a reaction database that integrates retardation processes with traditional thermodynamic databases and provides self-consistent database constants for performance assessment and reactive transport calculations with particular emphasis on uncertainty quantification.

DELIVERABLES

- **Technology Assessment Report**
  Twelve months into the project, a progress report must be submitted to the DOE that provides a technical assessment of methodologies and a framework for upgrading US performance assessment capabilities by improving thermodynamic and radionuclide retardation databases for use in performance assessment and reactive transport modeling.
- **Annual Progress Reports**
  In addition to Quarterly Reports, Annual Progress Reports outlining key accomplishments and progress to date shall be submitted. These reports will also list any technical publications prepared during the reporting period.
- **Final Report**
  Three months prior to the completion of the project, a draft final report will be submitted to the DOE that provides a prototype database for thermodynamic speciation and radionuclide retardation for use in performance assessment calculations (including uncertainty quantification) and a path forward for effectively implementing a comprehensive database. A final report will be prepared and submitted after incorporating any technical review comments.

PROGRAM DIRECTED: NUCLEAR REACTOR TECHNOLOGIES

CODIFICATION OF COMPACT HEAT EXCHANGER USAGE FOR NUCLEAR SYSTEMS (IRP-RC-1)
(FEDERAL POC – BILL CORWIN & TECHNICAL POC – SAM SHAM)
(ELIGIBLE TO LEAD: UNIVERSITIES ONLY)
(UP TO 3 YEARS AND $5,000,000)

Compact heat exchangers (CHXs) offer the potential for significant improvement in efficiency and reduction in cost for advanced reactors systems. Their use is appropriate with all coolants currently being investigated for such systems by DOE (helium, liquid metals & liquid salt) as well as for both supercritical CO_2 (sCo_2) for advanced energy conversion systems and even water for small modular or large integrated PWRs. Typical designs for CHXs include brazed plate fin heat exchangers, fusion welded formed plate heat exchangers, and diffusion bonded heat exchangers. Examples of these different types of CHXs are shown in Figures 1 to 3.

Rules for construction (including material, design, fabrication and installation, examination, testing, over-pressure protection) and in-service inspection of CHXs for use in nuclear systems, however, have not been developed within the ASME Code, hence there is currently no basis for the construction and operation of CHXs in either LWRs or advanced reactor systems. Rules for construction of CHXs for non-nuclear systems have been developed and are included in ASME Section VIII, and there are current NEUP projects to establish ASME Section III nuclear design rules and design analysis methodologies for CHXs in high temperature reactor systems. However, in addition to a variety of candidate CHX designs, the difference in temperature (LWRs ~315C, liquid metal reactors ~550C, liquid salt reactors ~750C, gas reactors ~750 to 950C) and pressure difference between reactor secondary coolant and sCO_2 across the CHX channels present significant challenges. A number of significant issues need to be resolved before an adequate technical basis for inclusion within ASME Section III for nuclear construction and Section XI for in-service inspection are available. The major issues that must be addressed and resolved for nuclear construction include:

- Additional welding development for diffusion bonding (DFW) should be performed to establish details of the current and augmented welding procedures to ensure adequate materials properties of the materials are available for inclusion in the ASME Code for nuclear construction.

- Design and fabricate (i) representative CHX models, or a smaller than full-scale section of the CHX core, and (ii) selective scaled CHX system (including CHX core, sidewalls and headers), and develop innovative testing methods to generate data to validate the design rules and design analysis methods (being developed by ongoing NEUP projects) under combined pressure and thermal stresses for applications to different reactor systems (helium, liquid metals & liquid salt) coupled to sCO_2 energy conversion system.

- CHX core diffusion bonds cannot be volumetrically inspected during post-construction examination with existing technology, but volumetric inspection is a requirement for the design for ASME nuclear service. Therefore current NDE requirements for Section VIII-type compact heat exchangers will have to be improved and extended for Section III applications.

- In-service inspection requirements are essential to the operation of CHXs and innovative in-service inspection methodologies applicable to CHXs will have to be developed.

- The potential for fouling of the micro-channels should be explored based on the service experience of current Section VIII vessels and on testing. Methods for cleaning micro-channels should also be explored and tested.

- Inspection of CHX during service life for clogging, leakage, and other conditions adverse to performance will be required for nuclear applications. Consideration during the design and construction process for methods for such inspections during service life should be explored and tested.

PROGRAM DIRECTED: NUCLEAR REACTOR TECHNOLOGIES
Interaction with ongoing NEUP projects on design rules and design analysis methodologies development and collaboration with ASME Code subject matter experts are highly encouraged. The potential for interactions with existing CHX manufacturers is strong and would be very valuable to the overall IRP effort. Establishing an IRP to investigate the issues described above would significantly augment the existing ART programmatic content and address a recognized need in a very useful manner. The university community has well established strengths that directly address the topics identified (materials joining, mechanical properties testing, stress analysis, non-destructive examination, etc.) and, in conjunction with industry, could form a powerful team that could make a great deal of progress towards resolving these issues in a three-year period. The value of developing a technical basis for including CHXs in the arsenal of tools available for advanced nuclear reactors is very high. Such a technical basis is required to allow ASME Section III to develop the rules needed for CHXs to be included in nuclear systems. Please note that the ongoing NE work on CHXs at SNL does not address any of the issues listed above that are needed to provide a basis for nuclear construction codification. The SNL work is limited to: • Monitoring S-CO_2 corrosion in the Sandia Split Flow Test Loop. • Develop a prototype PCHE in collaboration with Vacuum Process Engineering • Initiating a scaling study for heat exchangers for larger power levels The Office of Fossil Energy is also evaluating CHXs, primarily with regard to their usage in advanced sCO_2 energy conversion systems. Similarly, the FE-sponsored work does not address any of the issues listed above that are needed to provide a basis for nuclear construction codification. The FE work addresses: • The effects of the environment relevant to the FE systems on the materials of their CHX construction (corrosion, temperature, etc.) • The performance of model CHXs fabricated according to non-nuclear rules in test loops with respect to thermal-hydraulics, efficiency, etc. In addition to three FY2016 NEUP awards on the development of design rules and design analysis methods, there is also limited ongoing NE work relevant to CHXs within the NEUP program that peripherally addresses dissimilar welding issues for steam generator tubing, but is only distantly related to CHX issues, and more directly to a portion of the development of ASME design rules for CHXs. However, both of these efforts could be well coordinated with an integrated effort on CHXs for advanced high temperature reactors and integrated PWRs.

PROGRAM DIRECTED: NUCLEAR REACTOR TECHNOLOGIES

Figures

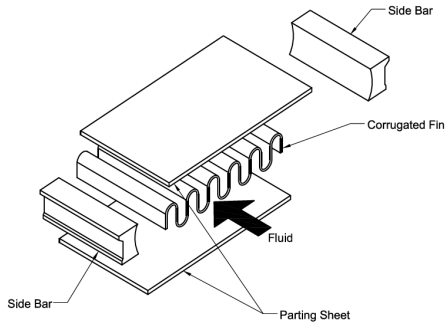

Figure 1. Brazed plate fin-heat exchanger.

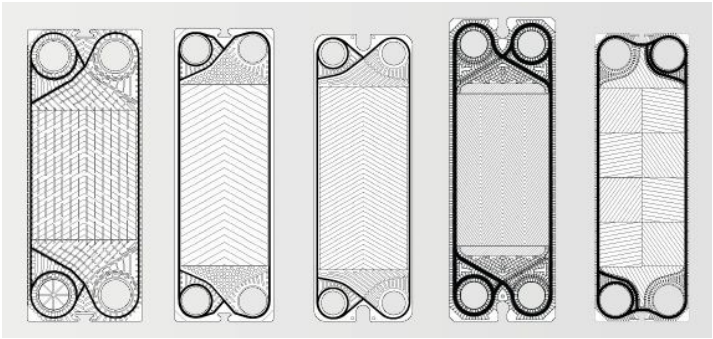

Figure 2. Formed plate heat exchanger with fusion welded edges.

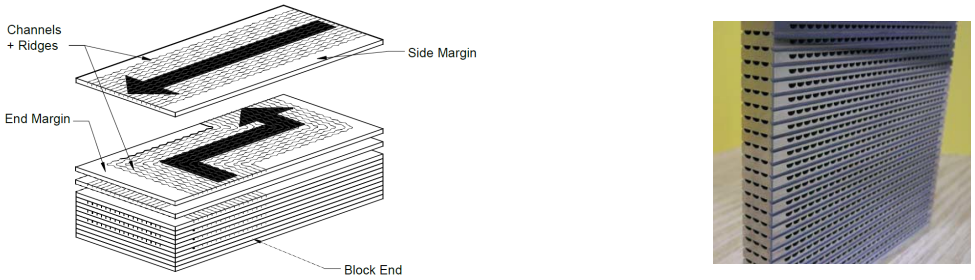

(a) (b)

Figure 3. (a) Plate stacking for diffusion-bonded cross/counterflow printed circuit heat exchanger (b) bonded printed circuit core (cross flow subsection).

PROGRAM DIRECTED: NUCLEAR ENERGY

GRAND CHALLENGE PROBLEM FOR NUCLEAR ENERGY (IRP-NE-1)
(FEDERAL POC – BHUPINDER SINGH & TECHNICAL POC – ROALD WIGELAND)
(ELIGIBLE TO LEAD: UNIVERSITIES ONLY)
(UP TO 3 YEARS AND $3,000,000 TOTAL U.S. PROJECT COST)

Background: The United States is a member of the Nuclear Energy Agency of the Organisation for Economic Co-operation and Development (OECD/NEA). The Office of Nuclear Energy within the Department of Energy is actively engaged with NEA in many areas relevant to our respective missions. NEA member countries are, collectively, world leaders in the use of nuclear technology and materials for a wide range of industrial, scientific, medical and energy purposes. The future use of such technologies appears to be increasing globally and there is a strong need to ensure that countries have the scientists and engineers needed to support their continued safe use. Spurring new specialists to become engaged in the nuclear technology field and to bring their creativity to innovate and expand the boundaries of our current knowledge is a key interest for many NEA countries. In partnership with its membership, the NEA is developing the concept of the NEA Education, Skills and Technology (NEST) Framework, which is aimed at addressing important issues in the areas of nuclear skills capability building, knowledge transfer and technical innovation within an international context. Under the NEST Framework, interested countries would support multinational projects that involve university students, professors and young professionals at research institutions. Further details of the implementation of the NEST Framework are being developed by a team of NEA member country experts as a cross-cutting NEA activity. This IRP is motivated by and supports the NEA effort and is intended to serve as a prototype for a potential larger effort to be undertaken through the NEST Framework.

IRP Goal and Objectives:

The Goal of this IRP is to solve a significant problem which presents a grand challenge to expanded use of nuclear energy worldwide. The main objective of the IRP is to support education, development and training in multiple technical disciplines associated with the use of nuclear energy by supporting approximately 10 students and 1 faculty member in the United States.

IRP Scope:

Applicants must address all of the elements listed below to be considered responsive to this IRP request for proposals.

1) Define a problem which presents a grand challenge to expanded use of nuclear energy worldwide. Examples of such problems are provided below:

    - How can an existing Pressurized Water Reactor (1GWe or more) be modified/redesigned to be more accident tolerant? Accident tolerant is intended to mean, elimination of the need for operator intervention and/or off-site emergency response for at least 72 hours without significant core damage. These modifications could include a total redesign of the reactor internals, and could include replacement of the reactor pressure head without replacing the reactor pressure vessel itself. The modified design should provide at least an additional 40 years of reactor life.
    - How can in-situ real-time measurements be made to accurately determine the environment in the core of a test reactor, e.g., spatially resolved thermal conductivity measurement, porosity redistribution and swelling in fuel, temperature profile of fuel pellets, chemical redistribution in fuel, neutron flux, etc.?
    - How can the reactor vessel of an existing nuclear power plant be modified or replaced to dramatically extend the life of the plant and to make it more accident tolerant?
    - How can the construction and operating costs of a sodium-cooled fast reactor system be reduced while maintaining or enhancing the safety of the power plant, e.g., by dramatically simplifying the design, improving performance, or by using advanced materials, such that reactor system is at least

PROGRAM DIRECTED: NUCLEAR ENERGY

cost competitive with currently available light water reactors, although it would be desirable to be even less expensive, on a per kW-hr basis.

The applicant can choose any of the above problems or define one on their own; however, the applicant must elaborate on their understanding of the problem and how it meets the goal and objective of this request for proposals.

2) This IRP imposes International Collaboration Requirements which are in addition to those specified elsewhere in the FY 2017 Consolidated Innovative Nuclear Research Funding Opportunity Announcement (FOA).

    a. The project team must include one international educational institution each from at least one and no more than two countries who are members of the OECD/NEA. The total number of students and faculty supported in the collaborating countries must be at least equal to those supported in the United States. The lead Principal Investigator must be from a United States educational institution and scope of work for each collaborating institution must be clearly defined.
    b. International participants must provide proof of equal faculty and student support for their work, should the project be selected.
    c. All U.S. funds provided under this award must be used to support the efforts of the educational institutions and their non-university partners in the United States.

3) The Applicant must describe how any intellectual property generated under the project will be handled.

4) Project Deliverables:

    The list of proposed project deliverables must include:

    a. A detailed project schedule.
    b. If a software is developed as part of the project, a verification and validation plan for each software.
    c. A final project report which includes (i) A statement of the problem and a description of the solution (ii) The extent to which the problem was solved and remaining or follow-on work needed (iii) A description of the extent to which the project was successful in supporting education, development and training in multiple technical disciplines associated with the use of nuclear energy and (iv) Lessons learned and suggestions that can be used by DOE-NE as well as NEA in future work.

PROGRAM DIRECTED: ENVIRONMENTAL MANAGEMENT

WEARABLE ROBOTIC DEVICES FOR WORKERS (IRP-EM-1)
(FEDERAL POC – RODRIGO RIMANDO & TECHNICAL POC – THOMAS NANCE)
(UP TO 2 YEARS AND $1,000,000)

Technical Objective

This Integrated Research Project (IRP) seeks a functional prototype(s) of a wearable, prosthetic-like, exoskeletal, bionic, and other attachable human assistive robotic devices(s) that can serve the workforce by functioning as (1) smart personal protective equipment (PPE) and/or (2) performance augmentation and amplification devices (PAADs).

Introduction

This IRP is intended to promote the development of robotics technologies for use in nuclear facilities and related nuclear applications. Particular emphasis is placed on enhancing worker health and safety and improving worker performance and productivity. While DOE Office of Environmental Management (EM) is the lead Program Secretarial Office for this IRP, there are inter-mission commonalities, cross-cutting applications, and opportunities for knowledge and technology sharing that warrant DOE-NE/DOE-EM collaboration. DOE-NE derives direct benefit from the mission-relevant research conducted under this IRP.

DOE-EM encourages robotics research and technology development for: (1) handling of high-hazard, high-consequence materials and waste, (2) tasks that are dirty (contaminated, toxic, nuisance), dull (routine, labor-intensive, repetitive, mundane), dangerous (pose significant occupational hazards), and/or difficult (require engineered measures); (3) easing the performance of worker/operator tasks that are physically demanding on or stressful to human body or are otherwise ergonomically challenging; (4) performing tasks that are beyond human abilities; (5) improving the ability to response to and recover from unplanned events or operational emergencies; and (6) improving the safety, quality, efficiency, and productivity of facility operations.

For the purpose of this IRP, "robotics" refers to the study, science and engineering of technologies associated with the theory, design, fabrication, testing, and application of mechanical devices and systems capable of performing a variety of investigative or manipulative tasks (1) as directed by human command or control or (2) according to pre-determined or programmed instructions.

"Radiation hardened systems" refers to systems that are immune or unaffected by the effects of ionizing radiation or radioactivity. "Radiation tolerant systems" refers to systems that are resistant to the effects of ionizing radiation or radioactivity to certain threshold limits.

The radioisotopes resulting from the nuclear fuel cycle and nuclear weapons production that are of particular interest to DOE-EM are the:

- Medium-lived fission products of cesium-137 and strontium-90;
- Long-lived fission products of technetium-99 and iodine-129; and
- Actinides of uranium-235, plutonium-239, plutonium-240, americium-241, and americium-243.

There are other radioisotopes of concern such as, but not limited to, hydrogen-3 (tritium) and the irradiated corrosion wear products of iron-55, cobalt-60, and nickel-59.

This IRP supports the National Robotics Initiative as part of the President's Advanced Manufacturing Partnership to accelerate the development and use of robots in the U.S. that work beside or cooperatively with people. This IRP is intended to implement, in part, broader collaboration with other federal agencies, colleges and universities, and other non-federal technology and research centers as described in the Secretary's response to the Secretary of Energy Advisory Board Task Force on Technology Development for Environmental Management.

PROGRAM DIRECTED: ENVIRONMENTAL MANAGEMENT

Background

The DOE was charged with the responsibility to address the nuclear weapons legacy left by the Manhattan Project, the Cold War nuclear arms race, and the early years of government-sponsored nuclear science and technology. Since 1989, DOE-EM has been engaged in the mission of environmental restoration, radioactive waste management, spent nuclear fuel and special nuclear material disposition, and nuclear facility decommissioning. Over $150 billion has been spent, yet cleanup is not even half complete. The remaining work is estimated to cost over $250 billion over a 50-year period. That work represents some of the most technically complex and hazardous cleanup in the world.

Rooted in the DOE-EM mission is the science of safety whereby scientific and technological advancements are infused and integrated into the routines of work planning and execution in a manner that improves safety and quality and reduces the government's cleanup liability. To address the high hazard, high consequence work, DOE-EM is actively promoting the use of advanced robotics as a key enabling technology.

Area of Interest

Wearable robotics devices and systems have been historically developed for health and medical applications to assist in injury recovery and rehabilitation, provide human assistance and augmentation to offset an injury or disability, and for limited military and sports uses. These same technologies are directly transferrable to the broader workforce. DOE-EM has launched an initiative to utilize wearable robotic devices to enhance worker health and safety as well as improve worker performance and productivity. A future workforce will be outfitted with wearable, assistive, prosthetic-like, exoskeletal, exo-muscular, bionic, and other enabling robotic devices that serve as (1) smart personal protective equipment (PPE) and (2) performance augmentation and amplification devices (PAAD).

Traditional PPE - hard hats, safety glasses, ear plugs, filtered masks, high-visibility vests, gloves, and steel-toed shoes - is designed to protect workers from exposure to workplace and environmental hazards that have not or could not be fully mitigated through engineered and/or administrative solutions. Traditional PPE protects against injuries caused from exposure to hazards originating from outside the body.

Focused differently, wearable robotic devices can be designed to protect workers from anatomical injuries due to, for example, overexertion, bodily reaction, repetitive motion, hyperextensions, over-rotation, excessive and repetitive vibration, and even the latent effects of aging. The integration of anatomical sensing devices, brain–computer interface devices, and biomechanical sensors provide added protection. Smart PPE protect against injuries due to stresses inside the body.

Wearable robotic devices also serve as PAADs. They are designed to better enable workers to perform tasks that are physically stressful or demanding, mentally taxing, ergonomically challenging, or even beyond human capability. By alleviating the physical and mental demands of certain tasks, workers will be able to work with much greater ease and efficiency as well as with improved safety and quality. The benefit to industrial work can be significant, especially for tasks that require heavy or constant lifting, squatting or bending, prolonged standing, working with arms raised above the shoulders or extended away from the torso for long periods of time, or constant walking on hard surface. The benefit to the military and other professions where high-risk, high-intensity tasks are routine can also be significant. PAADs will help improve worker performance and productivity.

In a future workforce, smart PPE will become as common as hard hats and PAADs will become tools of the trade, especially while handling high consequence, high hazard materials and working in dangerous environments.

Requirements

PROGRAM DIRECTED: ENVIRONMENTAL MANAGEMENT

Proposals submitted in response to this IRP must:

1) Demonstrate the leveraging of technologies and advancements that have already been made in wearable robotics devices by universities/colleges, other federal agencies, other federally funded research and development centers, or the non-nuclear industry;
2) Indicate the intention for collaboration with at least one other US university/college having established robotics expertise and assets;
3) Indicate the intention for collaboration with at least one DOE national laboratory/technology center, a non-DOE federally funded research and development center, a federally funded university affiliated research center, OR a federally owned and federally operated national laboratory/technology center.
4) Demonstrate full functionality of the wearable robotic device (smart PPE/PAAD) such that it can be readily demonstrated by an actual worker at one of DOE-EM's sites/projects.

ADVANCED ROBOTIC TELE-MANIPULATORS FOR GLOVEBOXES AND HOT CELLS (IRP-EM-2)
(FEDERAL POC – RODRIGO RIMANDO & TECHNICAL POC – THOMAS NANCE)
(UP TO 2 YEARS AND $1,500,000)

Technical Objective

This Integrated Research Project (IRP) seeks a functional prototype(s) of advanced robotics to accomplish tele-manipulation in gloveboxes and hot cells.

Introduction

This IRP is intended to promote the development of robotics technologies for use in nuclear facilities and related nuclear applications. Particular emphasis is placed on enhancing worker health and safety and improving worker performance and productivity. While DOE Office of Environmental Management (EM) is the lead Program Secretarial Office for this IRP, there are inter-mission commonalities, cross-cutting applications, and opportunities for knowledge and technology sharing that warrant DOE-NE/DOE-EM collaboration. DOE-NE derives direct benefit from the mission-relevant research conducted under this IRP.

DOE-EM encourages robotics research and technology development for: (1) handling of high-hazard, high-consequence materials and waste, (2) tasks that are dirty (contaminated, toxic, nuisance), dull (routine, labor-intensive, repetitive, mundane), dangerous (pose significant occupational hazards), and/or difficult (require engineered measures); (3) easing the performance of worker/operator tasks that are physically demanding on or stressful to human body or are otherwise ergonomically challenging; (4) performing tasks that are beyond human abilities; (5) improving the ability to response to and recover from unplanned events or operational emergencies; and (6) improving the safety, quality, efficiency, and productivity of facility operations.

For the purpose of this IRP, "robotics" refers to the study, science and engineering of technologies associated with the theory, design, fabrication, testing, and application of mechanical devices and systems capable of performing a variety of investigative or manipulative tasks (1) as directed by human command or control or (2) according to pre-determined or programmed instructions.

"Radiation hardened systems" refers to systems that are immune or unaffected by the effects of ionizing radiation or radioactivity. "Radiation tolerant systems" refers to systems that are resistant to the effects of ionizing radiation or radioactivity to certain threshold limits.

The radioisotopes resulting from the nuclear fuel cycle and nuclear weapons production that are of particular interest to DOE-EM are the:

- Medium-lived fission products of cesium-137 and strontium-90;
- Long-lived fission products of technetium-99 and iodine-129; and
- Actinides of uranium-235, plutonium-239, plutonium-240, americium-241, and americium-243.

There are other radioisotopes of concern such as, but not limited to, hydrogen-3 (tritium) and the irradiated

PROGRAM DIRECTED: ENVIRONMENTAL MANAGEMENT

corrosion wear products of iron-55, cobalt-60, and nickel-59.

This IRP supports the National Robotics Initiative as part of the President's Advanced Manufacturing Partnership to accelerate the development and use of robots in the U.S. that work beside or cooperatively with people. This IRP is intended to implement, in part, broader collaboration with other federal agencies, colleges and universities, and other non-federal technology and research centers as described in the Secretary's response to the Secretary of Energy Advisory Board Task Force on Technology Development for Environmental Management.

Background

The DOE was charged with the responsibility to address the nuclear weapons legacy left by the Manhattan Project, the Cold War nuclear arms race, and the early years of government-sponsored nuclear science and technology. Since 1989, DOE-EM has been engaged in the mission of environmental restoration, radioactive waste management, spent nuclear fuel and special nuclear material disposition, and nuclear facility decommissioning. Over $150 billion has been spent, yet cleanup is not even half complete. The remaining work is estimated to cost over $250 billion over a 50-year period. That work represents some of the most technically complex and hazardous cleanup in the world.

Rooted in the DOE-EM mission is the science of safety whereby scientific and technological advancements are infused and integrated into the routines of work planning and execution in a manner that improves safety and quality and reduces the government's cleanup liability. To address the high hazard, high consequence work, DOE-EM is actively promoting the use of advanced robotics as a key enabling technology.

Area of Interest

Glovebox Operations

Gloveboxes have widespread use for the handling of radioactive and nuclear materials within an enclosed, hermetically sealed, and controlled environment. Typically the glovebox will be equipped with clear walls/sides or windows through which an operator or laboratory technician can view the interior from a safe position exterior to the glovebox. One or more pairs of glove ports or gloved openings are provided with long-sleeved gloves attached. These gloves are affixed to the side/wall such that operators/lab techs can insert their hands and arms and perform a wide variety of tasks in a radiological controlled environment.

The atmosphere inside a glovebox is maintained at a lower air pressure than that of the outside to create negative air flow (into the glovebox) should a breach occur. This helps to prevent radioactivity from being released to outside of the glovebox. This constant negative air pressure creates a vacuum within a glovebox and has caused gloves to "become sucked in" and become somewhat rigid; this adds to the difficulty of using the gloves. Gloveboxes are typically robust structures that are not easily movable or adjustable. The glove ports are also at a fixed distance apart. These design features create ergonomic challenges for operators/lab techs of different heights, torso sizes, arm lengths, and hand sizes. Their reach is also limited to the glove sleeve length and the length of their own arms; as such, operators/lab techs may not be able to access areas within the glovebox. Maintenance can become costly as gloves routinely require replacement.

DOE-EM is pursuing advance robotic technologies that will address challenges associated with doing work within a glovebox. The integration of robotic arms and hands (or similar devices) that are tele-operated by an operator/lab tech, for example, can offer increased ability (dexterity, fine motor skills and grip), efficiency (work longer and with more focus), capability (added strength and extended reach), and safety (improved ergonomics). Smart design features of the robotic glovebox arms include, but are not limited to, real-time response (minimal latency), human-like movements (smooth and fluid), haptic or kinesthetic communication (sense of touch), compactness (small and slim), replaceable skins or coverings that can be readily decontaminated or cleaned, easy and quick replacement (swap-out) of the robotic arms/components, inherently safe (no sharp edges and does not

PROGRAM DIRECTED: ENVIRONMENTAL MANAGEMENT

spark or produce static charges), and, to the maximum extent practicable, can be disposed as low-level radioactive waste.

Hot Cell Operations

Hot cells are used for the handling of highly radioactive materials and special nuclear materials that require significant shielding of radiation or require robust contamination controls to protect workers, operators and laboratory technicians. Hot cells are permanent, vault-like, heavily shelled, containment chambers constructed within a building structure. Operators/lab techs perform work within the hot cell via a set of tele-operated manipulators. Work is viewed through high-density glass that is typically laced with lead or zinc bromide to shield radiation. Hot cells may also be equipped with lead-loaded or tungsten-loaded gloves.

For many of the same challenges of doing work in gloveboxes, DOE-EM is pursuing advance robotic technologies for tele-manipulation in hot cells.

Requirements

Proposals submitted in response to this IRP must:

1) Demonstrate utility in standard or common gloveboxes (i.e., no "one-off" glovebox designs) or hot cells in existing DOE facilities and laboratories;
2) Indicate the intention for collaboration with at least one other US university/college having established robotics expertise and assets;
3) Indicate the intention for collaboration with at least one DOE national laboratory/technology center, a non-DOE federally funded research and development center, a federally funded university affiliated research center, OR a federally owned and federally operated national laboratory/technology center.
4) Demonstrate full functionality of the robotic tele-manipulator such that it can be readily demonstrated by an actual worker at a glovebox/hot cell mock-up.

MULTI-USE AND MULTI-USER (MU2) ROBOTS (IRP-EM-3)
(FEDERAL POC – RODRIGO RIMANDO & TECHNICAL POC – THOMAS NANCE)
(UP TO 2 YEARS AND $1,500,000)

Technical Objective

This Integrated Research Project (IRP) seeks a functional prototype(s) of multi-use and multi-user (MU2) robots that can perform routine operations and can also be deployed in response to emergencies and operational upsets.

Introduction

This IRP is intended to promote the development of robotics technologies for use in nuclear facilities and related nuclear applications. Particular emphasis is placed on enhancing worker health and safety and improving worker performance and productivity. While DOE Office of Environmental Management (EM) is the lead Program Secretarial Office for this IRP, there are inter-mission commonalities, cross-cutting applications, and opportunities for knowledge and technology sharing that warrant DOE-NE/DOE-EM collaboration. DOE-NE derives direct benefit from the mission-relevant research conducted under this IRP.

DOE-EM encourages robotics research and technology development for: (1) handling of high-hazard, high-consequence materials and waste, (2) tasks that are dirty (contaminated, toxic, nuisance), dull (routine, labor-intensive, repetitive, mundane), dangerous (pose significant occupational hazards), and/or difficult (require engineered measures); (3) easing the performance of worker/operator tasks that are physically demanding on or stressful to human body or are otherwise ergonomically challenging; (4) performing tasks that are beyond human abilities; (5) improving the ability to response to and recover from unplanned events or operational emergencies; and (6) improving the safety, quality, efficiency, and productivity of facility operations.

PROGRAM DIRECTED: ENVIRONMENTAL MANAGEMENT

For the purpose of this IRP, "robotics" refers to the study, science and engineering of technologies associated with the theory, design, fabrication, testing, and application of mechanical devices and systems capable of performing a variety of investigative or manipulative tasks (1) as directed by human command or control or (2) according to pre-determined or programmed instructions.

"Radiation hardened systems" refers to systems that are immune or unaffected by the effects of ionizing radiation or radioactivity. "Radiation tolerant systems" refers to systems that are resistant to the effects of ionizing radiation or radioactivity to certain threshold limits.

The radioisotopes resulting from the nuclear fuel cycle and nuclear weapons production that are of particular interest to DOE-EM are the:

- Medium-lived fission products of cesium-137 and strontium-90;
- Long-lived fission products of technetium-99 and iodine-129; and
- Actinides of uranium-235, plutonium-239, plutonium-240, americium-241, and americium-243.

There are other radioisotopes of concern such as, but not limited to, hydrogen-3 (tritium) and the irradiated corrosion wear products of iron-55, cobalt-60, and nickel-59.

This IRP supports the National Robotics Initiative as part of the President's Advanced Manufacturing Partnership to accelerate the development and use of robots in the U.S. that work beside or cooperatively with people. This IRP is intended to implement, in part, broader collaboration with other federal agencies, colleges and universities, and other non-federal technology and research centers as described in the Secretary's response to the Secretary of Energy Advisory Board Task Force on Technology Development for Environmental Management.

Background

The DOE was charged with the responsibility to address the nuclear weapons legacy left by the Manhattan Project, the Cold War nuclear arms race, and the early years of government-sponsored nuclear science and technology. Since 1989, DOE-EM has been engaged in the mission of environmental restoration, radioactive waste management, spent nuclear fuel and special nuclear material disposition, and nuclear facility decommissioning. Over $150 billion has been spent, yet cleanup is not even half complete. The remaining work is estimated to cost over $250 billion over a 50-year period. That work represents some of the most technically complex and hazardous cleanup in the world.

Rooted in the DOE-EM mission is the science of safety whereby scientific and technological advancements are infused and integrated into the routines of work planning and execution in a manner that improves safety and quality and reduces the government's cleanup liability. To address the high hazard, high consequence work, DOE-EM is actively promoting the use of advanced robotics as a key enabling technology.

Areas of Interest

Emergency response covers a wide variety of conditions and situations such as off-normal facility operations, industrial and transportation accidents, fires, crime, acts of terrorism, and natural disasters. Public safety, firefighters, bomb technicians, search and rescue specialists, and other first responders risk their own personal safety and even their own life as they confront a variety of extreme hazards. Robotic devices and remote systems can greatly enhance emergency response capabilities. However, a large capital and operational investment is needed to develop, purchase and maintain emergency response robots; it is often cost-prohibited.

DOE-EM is pursuing MU2 robotic technologies that can be used to support normal as well as off-normal operations - that is, robotic devices and systems that are used to perform routine operations and can also be deployed in response to emergencies. These MU2 robots must be able to be used by personnel working in different professions and trades. For example, an assistive robot that is used by a health physics technician for performing routine radiological surveys can also be used by a first-responder to screen for the presence of

PROGRAM DIRECTED: ENVIRONMENTAL MANAGEMENT

airborne radioactivity prior to entering a compromised area or space. As such, "physicist-to-firefighter" usability is key to MU2 robots. Similarly, large, ruggedized, all-terrain robotic utility vehicles used in demanding outdoor environments such as mines and farms can be deployed in response to natural disasters

MU2 robots will ultimately provide interoperability, dissimilar redundancy, and response defense-in-depth.

The radioisotopes resulting from the nuclear fuel cycle and nuclear weapons production that are of particular interest to EM are the:

- Medium-lived fission products of cesium-137 and strontium-90;
- Long-lived fission products of technetium-99 and iodine-129; and
- Actinides of uranium-235, plutonium-239, plutonium-240, americium-241, and americium-243.

There are other radioisotopes of concern such as, but not limited to, hydrogen-3 (tritium) and the irradiated corrosion wear products of iron-55, cobalt-60, and nickel-59.

Requirements

Proposals submitted in response to this IRP must:

1) Indicate the intention for collaboration with at least one other US university/college having established robotics expertise and assets;
2) Indicate the intention for collaboration with at least one DOE national laboratory/technology , a non-DOE federally funded research and development center, a federally funded university affiliated research center, OR a federally owned and federally operated national laboratory/technology center.
3) Indicate the intention for collaboration with at least one emergency/disaster/first response organization (e.g., public safety, police officers, firefighters, paramedics, emergency medical technicians, etc.) or special response/crisis teams (e.g., mine rescue, special weapons and tactics, bomb disposal, etc.); AND
4) Demonstrate full functionality of the MU2 robot such that it can be readily demonstrated for normal as well as off-normal operations at a mock-up facility.

Appendix D: Data Needs for Validation

Data Needs for Modeling and Simulation

As you formulate your applications in response to this FOA, consider that there are cross-cutting data needs that support NE's modeling and simulation efforts. High priority data needs are listed below for both the Nuclear Energy Advanced Modeling and Simulation program (NEAMS) and the Energy Innovation Hub for Modeling and Simulation. If an application addresses any of these critical data needs, please highlight this possibility in your application and work with the Department to ensure that data are captured in a useable format. Application submission will include an opportunity to specifically highlight this connection.

NEAMS is an advanced modeling and simulation codes and methods development program. NEAMS is focused on providing a Toolkit that can be used in whole or in part to simulate a wide range of nuclear processes for both light water reactors and advanced reactors. Key components of the NEAMS Toolkit are already in use by the national laboratories, academia, and industry. CASL is an important user of NEAMS technologies. Additional information on NEAMS can be found at http://energy.gov/ne/advanced-modeling-simulation. The Energy Innovation Hub for Modeling and Simulation is developing predictive capability for addressing technical issues in currently operating nuclear power plants' performance and safety. Termed "Challenge Problems," these issues include complex phenomena that are multi-physics and multi-scale in nature. Challenge Problems include: Crud-Induced Power Shift (CIPS); Crud-Induced Localized Corrosion (CILC); Pellet-Cladding Interactions (PCI); Grid-to-Rod-Fretting (GTRF); Departure from Nucleate Boiling (DNB); Loss of Coolant Accident (LOCA); and Reactivity Initiated Accident (RIA). Additional details about the Challenge Problems and M&S Hub can be found at: http://www.casl.gov/strategy.shtml.

Critical Data Needs for Nuclear Energy Advanced Modeling and Simulation (NEAMS)

The data needs for the NEAMS product lines are described as follows.

Fuels Product Line

Engineering-scale Fuel Performance (BISON Validation):

For fission gas behavior models, improved temperature-dependent diffusion coefficient measurements of Xe in UO_2 are needed. Also, fission gas release histories (as opposed to just end-of-life measurements) are needed to validate gas release models, especially during power transients.

Mechanical behavior (yield stress, creep behavior, failure data) for zircaloy cladding that has been irradiated and exposed to chemical environments conducive to stress corrosion cracking. Data is needed for various Zr alloys, heat treatments, etc.

For pellet-cladding mechanical interaction, data that captures 3D effects in defective LWR fuel, such as a missing pellet surface (MPS), is needed to validate our 3D models. Data could include cladding and/or fuel temperatures, cladding stress/strain, diameter evolution in the vicinity of the MPS.

Meso-scale Microstructure Evolution (MARMOT Validation):

Property measurements as input to microstructure simulations are needed. Specifically, well-controlled and characterized experiments that measure the grain boundary mobility, grain boundary energy, grain boundary structure, and defect properties in UO_2 specimens with no porosity are of interest.

For validation, grain growth data either in bicrystals or polycrystals for UO_2 for which grain boundary properties are available is needed. We also need experiments showing temperature gradient-driven migration of pores or grain boundaries in UO_2. We need data showing fission gas bubble behavior correlated with microstructure in UO_2 (e.g., grain boundary type, dislocations, etc.) and data from well-controlled experiments showing the impact of defects on UO_2 thermal conductivity.

Lower Length-scale Model Development (i.e., atomistic simulations)

Fission gas and fission product diffusivities in $UO_{2\pm x}$ under controlled conditions (i.e., known oxygen potential or non-stoichiometry, well characterized microstructure, and known irradiation history/conditions) is needed. The measurements should be performed to allow determination of effective activation energies and pre-exponential factors, which implies measurements over a reasonably wide range of temperatures. Diffusion at microstructure features such as grain boundaries is also of interest. Validation is also needed or at least desired for the defect properties underlying the prediction of fission gas and fission product diffusivities.

The distribution of fission gas bubbles and fission product precipitates in irradiated UO_2 as well as the elemental distribution within UO_2 grains, ideally as function of time, chemistry, irradiation history and temperature is needed.

The thermal conductivity of $UO_{2\pm x}$ and $UO_{2\pm x}$ containing fission gas/fission products, as well as UO_2, with well-characterized irradiation histories is needed.

Reactor Product Line

Thermal Fluid Simulations (Nek5000 Validation)

Time-resolved turbulent heat transfer/transport data is needed for validation of computational fluid dynamics tools applied to advanced reactor coolants (e.g., liquid sodium, helium, and liquid salts) and operating conditions. Data should support validation of turbulence field predictions using high-resolution methods such as Large Eddy Simulation and Direct Numerical Simulation. Data for realistic fuel assembly geometries and data sets that include well-resolved characterizations of conjugate heat transfer in structural elements are of particular interest.

Also of interest is high-resolution data that supports validation of predictive capabilities for assessment stability of thermal fluid transport phenomena, particularly in natural or mixed convection flow regimes. Data relevant to advanced reactor coolants and/or conditions is preferred.

Structural Mechanics Simulations (Diablo Validation)

In advanced reactor applications, deformation of core structural components is often an important reactivity feedback that must be accurately represented in assessments of the reactor's transient response. Validation data is needed to confirm the accuracy of predictions of deformation of core structural component (e.g., fuel assembly ducts, core plates, upper internal structures, control rod drive lines) as a result of thermal cycles, creep, swelling and combinations of the above. Data sets that provide well-resolved characterizations of the response of single components as well as multicomponent systems with load pads or other contacts are especially desirable.

Data is also needed to support validation of predictions of inelastic creep and irradiation swelling in structural (non-fuel) component materials at anticipated advanced reactor (e.g., SFR, VHTR, FHR) conditions (e.g., pressure, temperature, irradiation). Consistent uni-axial and multi-axial loading data for classes of materials at selected conditions is desirable.

Integrated Multiphysics Simulations (SHARP Toolset Validation)

Data is needed to support validation of the integrated SHARP Toolset, which includes neutronics (PROTEUS), thermal fluid (Nek5000) and structural mechanics (Diablo) capabilities. While collection of integrated reactor dynamics data for validation the system of three components is likely beyond the scope of NEUP, there is significant interest in data for validation of bi-lateral combinations of the three toolset components. For example, thermal fluid and structural response data for components subjected to transient thermal stratification or thermal striping conditions is of interest.

Validation Data to Support the Consortium for Advanced Simulation of Light Water Reactors (CASL) Challenge Problems

A recent survey of validation data needed to support Challenge Problems identified several areas where additional data are highly desirable. In particular, the study highlights the need for accurate measurements of low length scale phenomena and multi-physics interactions modeled in CASL computer codes.

Further, value of a dataset for a Challenge Problem validation depends on relevance and scaling of experimental conditions (including geometry, materials), and uncertainty of measured data. Accurate estimates of experimental uncertainties will be valuable.

In addition to experimentation, meeting the data needs for validation of advanced modeling and simulation requires substantial efforts in (i) development of advanced diagnostics methods; (ii) using advanced simulation and VUQ methods to design and guide the validation experiments; and (iii) collection, characterization, warehousing, and preparation of data for an integrated model calibration and validation process. Your coordination of relevant efforts in these areas with CASL is also strongly encouraged.

The data needs for the CASL Challenge Problems are described as follows.

CRUD Challenge Problems (CIPS, CILC)

While extensive databases exist for CRUD from plant observations and measurements, detailed phenomena in CRUD are poorly characterized. Most critical are phenomena at the interface between reactor coolant chemistry, materials, and thermal-hydraulics.

The following topics are identified CRUD validation data needs:

1. Crud deposition thermo-dynamics
2. Chemical reactions in crud
3. Composition of complex spinel and other oxide phases in crud
4. Crud deposition efficiency as a function of dub-cooled boiling rate
5. Measure erosion rate of previously deposited crud on fuel rods after sub-cooled boiling stops
6. Measure mass evaporation rate as a function of heat flux on PWR fuel rods
7. Fuel assembly crud mass
8. Fractalline properties of crud
9. Crud growth rate vs. peak clad temperature
10. CILC failure mechanism.

It is important that validation experiments are performed (when practical) under conditions that scale well to PWR prototypic conditions (high pressure, high heat fluxes, low concentrations of chemicals). It is noted that it is difficult to obtain well-scaled data on crud transport and deposition from integral-effect tests. High priority is given to a program of small-scale tests. Innovative experimental approaches are needed to investigate the basic chemistry and thermo-hydraulics inside a manufactured crud deposit (with accurately characterized morphology). Advanced instruments may be needed to obtain spatially and temporarily resolved temperature, chemical concentrations, B^{10} precipitation, boiling velocity, etc. during the experiment. A new kind of sample probe may be needed to accurately measure reactor coolant particle concentrations and crud concentrations at critical locations.

GTRF Challenge Problem

Experimental data is needed in three main areas.

Wear measurements of different couples of irradiated materials (oxide/oxide, oxide/metal, metal/metal) under different vibration modes (sliding, impact, etc.) at different amplitudes are needed.

Time dependent cross-flow effect on rod vibration, as part of turbulence pressure on fuel rod studies is needed. Direct measurement of instantaneous dynamic pressure on fuel rod surface is critical data to validate CFD simulation. Tests can be based on small scale rod bundle (e.g., 5 × 5) with grid spacers and three spans.

Data related to grid-to-rod gap formation is needed. This is a complex process, involving dimensional changes due to fuel rod creep down, grid spring relaxation, and complex creep behavior due to variations in local cold work, and grid cell growth. High precision experiments are needed to characterize these processes.

PCI Challenge Problem

Experiments are needed in two main areas: fuel pellet cracking and relocation and Zr-alloy multi-axial thermal creep. In both cases, out-of-pile separate-effect tests and in-pile integral-effect tests would provide complementary data to support validation.

The out-of-pile experiment would evaluate pellet cracking and fragment movement during normal operation. UO_2 fracture behavior and frictional interaction between pieces would be studied under representative thermal and stress conditions. Such separate effects tests include using electrically heated pellets to obtain fracture characteristics and crack roughness parameters.

In-pile tests would measure pellet-cladding mechanical interaction during in-pile power maneuvers to evaluate gap closure and pellet mechanical compliance. In-pile testing would use single rod experiments under different burnup, peak power, and power ramp rates. On-line diameter and temperature measurements would be needed. Design of such experiments and development and demonstration of in-pile measurement techniques are of high priority.

DNB Challenge Problem

Existing datasets have been successfully used for fuel design improvement and DNB prevention, as well as for assessment of sub-channel codes. However, the data quality is not adequate for validating DNB simulations under the plant design conditions, and for calibration and validation of advanced mechanistic DNB and/or two-phase flow CFD models. Areas where additional data are most needed include the effect of rod surface characteristics on DNB, void measurements in subcooled flow boiling in rod bundles, high-fidelity turbulent mixing, including the impact of spacer grid design features `on DNB, and transient DNB testing.

High precision void fraction distributions in boiling channels under reactor prototypic conditions are identified as a cross-cutting area of the highest priority for calibrating and improving thermo-hydraulics methods (THM) used in CRUD, DNB and other Challenge Problems. Experiments with void measurements by radiographic imaging or other techniques are needed for subcooled and saturated boiling conditions at high pressures and flow conditions simulating reactor operational, transient and accident conditions. Design of such experiments and development and demonstration of high-fidelity imaging techniques are of high priority.

Appendix E: Accessing Nuclear Science User Facilities

As previously described in this document, the NSUF provides cost-free access to DOE, University, and Industry facilities. The access to these facilities also includes the support of the technical staff at each facility to ensure that the applicant is able to successfully complete their research. With the integration of NSUF access into this FOA, the process for application for NSUF access will be different from stand-alone NSUF solicitations occurring prior to FY 2016. An additional requirement to forward fund awards also significantly differs from the stand alone NSUF solicitation process. Figure E-1 depicts the new process that implements these changes. Note that NSUF rapid turn-around experiments are not part of this FOA or new process and will continue on a three calls per year frequency.

Unlike the other workscopes in this FOA, the applicant will not be able to provide cost information without the involvement of the NSUF facilities and staff. The effort to develop a firm cost estimate requires effort on the applicant's part as well as the NSUF facilities and staff and must be started at the earliest possible date in order to have the information available for inclusion in the full application. In order to get this process started, the applicant will be required to contact the NSUF Program Office to identify a NSUF technical lead and submit a letter of intent to apply for the FOA. After the LOI is received, the applicant and NSUF technical lead will work together to develop the Pre-Application and begin the process to define the scope of the application and estimate cost.

For all applications, the NSUF facility technical lead will work with the applicant to define the scope in the form of a Statement of Work (SOW). The SOW will be reviewed and approved by the NSUF Program Office. As a minimum, the SOW will include the following (as applicable):

1. Specific requirements for specimen acquisition (e.g., material acquisition, fabrication requirements, and specimen configuration)

Specific requirements for irradiation or beam-time (e.g., neutron or beam energy spectrum, target temperature, flux and fluence [or burn-up/dpa] for each specimen, in-pile instrumentation, etc.)

Specific requirements for post-irradiation examination (PIE) of each specimen (e.g., visual examination, dimensional examinations, tensile testing radiography, microscopy, etc.)

Proposed time-line.

The approved SOW will be utilized by the NSUF facility technical staff to develop an execution plan and cost estimate for the SOW. The execution plan will typically address the following elements (as applicable):

1. Concept for the irradiation device including fabrication and assembly plans

Irradiation position and duration

Experiment shipping

Disassembling and cataloging the experiment

Specimen preparation and shipping

Specimen examination details

Waste disposal

Resource loaded schedule.

The information in the execution plan will then be used by the NSUF facility to develop a cost estimate for the proposed scope of work. The cost estimate will then be reviewed by the NSUF Program Office to determine if the proposed scope of work will fit into the anticipated award budget for this FOA. If the cost estimate is higher than the budget, the NSUF Program Office may negotiate a scope decrease, if appropriate, with the PI and technical lead in order to properly size the scope of work. After negotiation, the SOW and cost estimate will be updated to match the negotiated scope so that this information can be incorporated into the full application.

After award announcement, several steps will be required prior to initiation of work. The successful applicant's institution will be required to sign a Non-Proprietary User Agreement with Battelle Energy Alliance. Appendix F contains a typical User Agreement. The SOW will be an appendix in the User Agreement in order to bind the PI to the SOW and to define the NSUF policies applicable to the scope of work. A subcontract(s) or work authorization(s), with a total value equal to the previously developed cost estimate, will be placed with NSUF facilities performing the work defined the in SOW and experiment execution plan.

NSUF Quality Assurance Requirements

Irradiation of materials in test reactors requires additional rigor and quality assurance requirements beyond those described in other sections of this FOA. Specific requirements will depend on the reactor license, the irradiation vehicle design and specimen constituents. NSUF Technical leads will assist the PI in understanding the specific requirements early in the process.

Budget Development for NSUF Applications

As previously described, applicants may apply for NSUF access with or without support from other works scopes in this FOA. Bridge funding will no longer be available through NSUF, so applicants need to ensure that the following cost elements are covered within the R&D budget for NSUF-1 in this FOA or via another fund source for NSUF-2:

1. Travel costs to NSUF facilities for facility access training, technical meetings, examinations, experiment loading, etc.

Applicant salary support.

Graduate student support.

Post-doctoral or other researcher support.

Materials and supplies support at the PI's work location.

Figure E-1. New process showing implementation of changes.

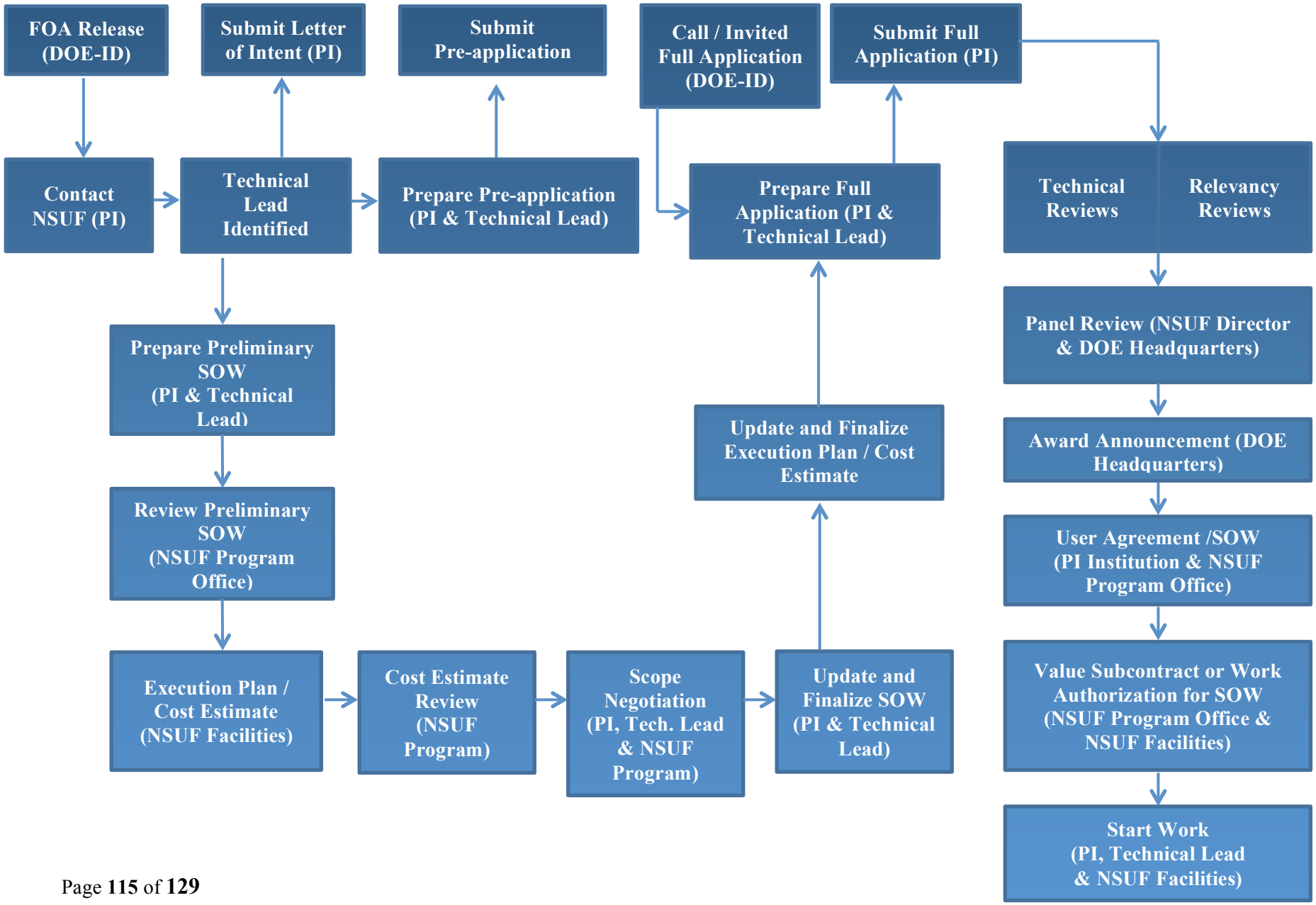

Appendix F: Draft Nuclear Science User Facilities User Agreement

Idaho National Laboratory

Non-Proprietary User Agreement

User Facility Agreement No. BETWEEN

BATTELLE ENERGY ALLIANCE, LLC

(" CONTRACTOR")
Operator of The Idaho National Laboratory (hereinafter “Laboratory”) under U.S. Department of Energy (DOE) Contract No. DE-AC07-05ID14517

AND

("USER")

(Collectively, “the Parties”)

The obligations of the above-identified DOE Contractor may be transferred to and shall apply to any successor in interest to said Contractor continuing the operation of the DOE Non-Proprietary User Facility involved in this User Agreement.

ARTICLE I. FACILITIES AND SCOPE OF WORK

Subject to the terms and conditions of this Agreement, CONTRACTOR will make available to employees, consultants and representatives of USER (hereinafter called "Participants") certain Laboratory Non-Proprietary User facilities, which may include equipment, services, information and other material, with or without Laboratory scientist collaboration, for purposes as described in the attached Scope of Work and in accordance with the attached Funding Statement, both of which are incorporated by this reference and are made a part of this Agreement. Amendments to the attached Scope of Work and Funding Statement may be submitted by USER for identifying facilities and purposes during the term of this Agreement (see Article II). Such amendments will be considered to be part of this Agreement upon written acceptance by CONTRACTOR. The attached Scope of Work sets forth a specific project, including deliverables, to be performed pursuant to this Agreement. The Scope of Work and abstracts thereof, shall not be considered proprietary information and shall be publicly releasable. The Parties agree that an initial abstract of the work to be performed shall be deliverable under this Agreement.

ARTICLE II. TERM OF THE AGREEMENT

This Agreement shall have a term of ____ years from the effective date. The term of this Agreement shall be effective as of the date on which it is signed by the last of the Parties.

ARTICLE III: COST

Each Party will bear its own costs and expenses associated with this Agreement unless otherwise agreed to by the Parties or as may otherwise be agreed to by the User and DOE.

ARTICLE IV: ADMISSION REQUIREMENTS

USERs and Particpants are subject to the administrative and technical supervision and control of CONTRACTOR; and will comply with all applicable rules of CONTRACTOR and DOE with regard to admission to and use of the User facility, including safety, operating and health-physics procedures, environment protection, access to information, hours of work, and conduct. Participants shall execute any and all documents required by CONTRACTOR acknowledging and agreeing to comply with such applicable rules of CONTRACTOR. Participants will not be considered employees of CONTRACTOR for any purpose.

ARTICLE V: PROPERTY AND MATERIALS***

USER may be permitted by Contractor to furnish equipment, tooling, test apparatus, or materials necessary to assist in the performance of its experiment(s) at the USER facility. Such items shall remain the property of USER, except as otherwise provided in this Article. Unless the Parties otherwise agree, all such property furnished by USER or equipment and test apparatus provided by USER will be removed by USER within sixty (60) days of termination or expiration of this Agreement or will be disposed of as directed by USER at User's expense. Any equipment that becomes integrated into the facility shall be the property of the Government. USER acknowledges that any material supplied by USER may be damaged, consumed or lost. USER will return facilities and equipment utilized in their original condition except for normal wear and tear.

CONTRACTOR shall have no responsibility for USER's property in CONTRACTOR's possession other than loss or damage caused by willful misconduct or gross negligence of CONTRACTOR or its employees.

Personal property produced or acquired during the course of this Agreement shall be disposed of as directed by the owner at the owner's expense.

USER represents that it owns and has full authority to transfer ownership and title to any materials it supplies for the purpose of irradiation under this Agreement and that said materials are free of any liens, claims of ownership, or other liabilities. Transfer of materials for irradiation and/or examination under this Agreement, shall constitute a transfer of title of said materials from User to DOE upon delivery of the materials at the Nuclear Science User Facility (NSUF) unless otherwise specified.

After the material has been irradiated, transferred to an examination facility and extracted from the encapsulation and/or holders, the USER will be notified by the CONTRACTOR that the irradiated material is available for examination. The USER will have exclusive research rights to the irradiated material for a period of three (3) years from the date of notification. After the three (3) years, DOE and CONTRACTOR have full discretion to make the irradiated material available to the general research community, maintain possession, transfer possession, or dispose of the irradiated material. DOE may transfer title to the material at its discretion.

ARTICLE VI: SCHEDULING***

USER understands that CONTRACTOR will have sole responsibility and discretion for allocating and scheduling usage of the User Facilities and equipment needed for or involved under this Agreement.

ARTICLE VII: INDEMNITY AND LIABILITY***

A. **Personnel Relationships -** USER shall be responsible for the acts or omissions of Participants.

B. Product Liability - To the extent permitted by US and US State law, if USER utilizes the work derived from this Agreement in the making, using, or selling of a product, process or service, then USER hereby agrees to hold harmless and indemnify CONTRACTOR and the United States Government, their officers, agents and employees from any and all liability, claims, damages, costs and expenses, including attorney fees, for injury to or death of persons, or damage to or destruction of property, as a result of or arising out of such utilization of the work by or on behalf of USER, its assignees or licensees.

C. General Indemnity - To the extent permitted by US and US State law, USER hereby agrees to indemnify and hold harmless CONTRACTOR and the United States Government, their officers, agents and employees from any and all liability, claims, damages, costs and expenses, including attorney fees, for injury to or death of persons, or damage to or destruction of property, to the extent such liability, claims, or damages is caused by or contributed to the negligence or intentional misconduct of USER or its employees or representatives during the performance of the work under this Agreement.

D. Patent and Copyright Indemnity—Limited - *To the extent permitted by US and US State law, USER shall fully indemnify the Government and CONTRACTOR and their officers, agents, and employees for infringement of any United States patent or copyright arising out of any acts required or directed or performed by USER under the Agreement to the extent such acts are not normally performed at the facility.*

E. The liability and indemnity provisions in paragraphs B, C and D above shall not apply unless USER shall have been informed as soon as practicable by CONTRACTOR or the Government of the suit or action alleging such infringement, and such indemnity shall not apply to a claimed infringement that is settled without the consent of USER unless required by a court of competent jurisdiction.

F. General Disclaimer -

THE GOVERNMENT AND CONTRACTOR MAKE NO EXPRESS OR IMPLIED WARRANTY AS TO THE CONDITIONS OF THE USER FACILITY FURNISHED HEREUNDER. IN ADDITION, THE GOVERNMENT, CONTRACTOR AND USER MAKE NO EXPRESS OR IMPLIED WARRANTY AS TO THE RESEARCH OR ANY INTELLECTUAL PROPERTY, GENERATED INFORMATION, OR PRODUCT MADE OR DEVELOPED UNDER THIS AGREEMENT, OR THE OWNERSHIP, MERCHANTABILITY, OR FITNESS FOR A PARTICULAR PURPOSE OF THE RESEARCH OR RESULTING PRODUCT; THAT THE GOODS, SERVICES, MATERIALS, PRODUCTS, PROCESSES, INFORMATION, OR DATA TO BE FURNISHED HEREUNDER WILL ACCOMPLISH INTENDED RESULTS OR ARE SAFE FOR ANY PURPOSE INCLUDING THE INTENDED PURPOSE; OR THAT ANY OF THE ABOVE WILL NOT INTERFERE WITH PRIVATELY OWNED

RIGHTS OF OTHERS. THE GOVERNMENT, CONTRACTOR AND/OR USER SHALL NOT BE LIABLE FOR SPECIAL, CONSEQUENTIAL, OR INCIDENTAL DAMAGES ATTRIBUTED TO USE OF SUCH FACILITIES, RESEARCH OR RESULTING PRODUCT, INTELLECTUAL PROPERTY, GENERATED

INFORMATION, OR PRODUCT MADE OR DELIVERED UNDER THIS AGREEMENT.

ARTICLE VIII: PATENT RIGHTS***

A. Definitions

1. "Subject Invention" means any invention or discovery conceived or first actually reduced to practice in the course of or under this Agreement.
2. "USER Invention" means any Subject Invention of USER.
3. "CONTRACTOR Invention" means any Subject Invention of CONTRACTOR.
4. "Patent Counsel" means the DOE Counsel for Intellectual Property assisting the DOE Contracting activity.

B. Subject Inventions

CONTRACTOR and USER agree to disclose their Subject Inventions, which includes any inventions of their Participants, to each other, concurrent with reporting such Subject Inventions to DOE.

C. CONTRACTOR's Rights

Except as provided below in the case of joint inventions, CONTRACTOR Inventions will be governed by the provisions of CONTRACTOR'S Prime Contract for operation of the User facility.

D. USER's Rights

Subject to the provisions herein, USER may elect title to any USER Invention and in any resulting patent secured by USER within one year of reporting the subject invention to DOE. The USER shall file a US patent application within a reasonable period of time. Where appropriate, the filing of patent applications by USER is subject to DOE security regulations and requirements.

E. Joint Inventions

For Subject Inventions conceived or first actually reduced to practice under this Agreement that are joint Subject Inventions made by CONTRACTOR and USER, each Party shall have the option to elect and retain title to its undivided rights in such joint Subject Inventions.

F. Rights of Government

1. USER agrees to timely assign to the Government, if requested, the entire right, title, and interest in any country to each USER Invention where USER:
   a. Does not elect to retain such rights; or

b. Fails to timely have a patent application filed in that country on the USER Invention or decides not to continue prosecution or not to pay the maintenance fees covering the Invention; or

c. At any time, no longer desires to retain title.

2. USER shall provide the Government a copy of any application filed by USER promptly after such application is filed, including its serial number and filing date.

3. USER hereby grants to the Government a nonexclusive, nontransferable, irrevocable, paid-up license to practice or have practiced for or on behalf of the United States the USER Invention made under said project throughout the world.

4. USER acknowledges that the DOE has certain March-in Rights to any USER Inventions elected by the USER in accordance with 48 C.F.R. 27.304-1(g) and that the USER is subject to the requirements with respect to preference for U.S. industry pursuant to 35 U.S.C. § 204 to any USER Inventions elected by the USER.

5. The USER agrees to include, within the specification of any U.S. patent applications and any patent issuing thereon covering a USER Invention, the following statement: "The Government has rights in this invention pursuant to a USER Agreement (specify number) between (USER name) and (CONTRACTOR Name), which manages and operates (name of Laboratory) for the US Department of Energy."

6. USER agrees to submit on request periodic reports to DOE no more frequently than annually on the utilization of USER Inventions or on efforts to obtain such utilization that are being made by USER or its licensees or assignees.

7. Facilities License: USER agrees to and does hereby grant to the Government a nonexclusive, nontransferable, irrevocable, paid-up license in and to any inventions or discoveries, regardless of when conceived or actually reduced to practice or acquired by USER, which are incorporated in the User Facility as a result of this Agreement to such an extent that the facility is not restored to the condition existing prior to the Agreement (1) to practice or to have practiced by or for the Government at the facility, and (2) to transfer such licenses with the transfer of that facility. The acceptance or exercise by the Government of the aforesaid rights and license shall not prevent the Government at any time from contesting the enforceability, validity or scope of, or title to, any rights or patents herein licensed.

G. Invention Report and Election

USER shall furnish the Patent Counsel a written report concerning each USER Invention within six months after conception or first actual reduction to practice, whichever occurs first. If USER wishes to elect title to the Invention, a notice of election should be submitted with the report or within one year of such date of reporting.

ARTICLE IX: RIGHTS IN TECHNICAL DATA***

A. Definitions:

1. "Technical Data" means recorded information regardless of form or characteristic, of a scientific or technical nature. Technical Data as used herein does not include financial reports, costs analyses, and other information incidental to Agreement administration.
2. "Proprietary Data" means Technical Data which embody trade secrets developed at private expense, outside of this agreement, such as design procedures or techniques, chemical composition of materials, or manufacturing methods, processes, or treatments, including minor modifications thereof, provided that such data:
   - **a.** Are not generally known or available from other sources without obligation concerning their confidentiality.
   - **b.** Have not been made available by the owner to others without obligation concerning their confidentiality
   - **c.** Are not already available to the CONTRACTOR or the Government without obligation concerning their confidentiality.
   - **d.** Are marked as "Proprietary Data."
3. "Unlimited Rights" means right to use, duplicate, or disclose Technical Data, in whole or in part, in any manner and for any purpose whatsoever, and to permit others to do so.

B. Allocation of Rights

1. The Government shall have Unlimited Rights in Technical Data first produced or specifically used in the performance of this Agreement except as otherwise provided in this Agreement.
2. USER shall have the right to use for its private purposes, subject to patent, security or other provisions of this Agreement, Technical Data it first produces in the performance of this Agreement provided the data delivery requirements of this Agreement have been met as of the date of the private use of such data; and Technical Data first produced by CONTRACTOR, if any, under this Agreement. USER agrees that to the extent it receives or is given access to Proprietary Data or other technical, business or financial data in the form of recorded information from DOE or a DOE contractor or subcontractor, USER shall treat such data in accordance with any restrictive legend contained thereon, unless use is specifically authorized by prior written approval of the Contracting Officer.

C. Deliverables

1. USER agrees to furnish to DOE or CONTRACTOR those data, if any, which are (a) specified to be delivered in Appendices, (b) essential to the performance of work by CONTRACTOR personnel or (c) necessary for the health and safety of such personnel in the performance of the work. Any data furnished to DOE or CONTRACTOR shall be deemed to have been delivered

with unlimited rights unless marked as "Proprietary Data" of USER.

2. Upon completion or termination of the project, USER agrees to deliver to DOE and CONTRACTOR a nonproprietary report describing the work performed under this Agreement.

D. Legal Notice

The following legal notice shall be affixed to each report or publication resulting from this Agreement which may be distributed by USER:

DISCLAIMER NOTICE

This document was prepared by __ as a result of the use of facilities provided through the U.S. Department of Energy (DOE) Nuclear Science User Facilities program, which is managed by Battelle Energy Alliance, LLC, acting under Contract No.DE-AC-07-05ID14517. Neither Battelle Energy Alliance, LLC, DOE, the U.S. Government, nor any government contractors, nor other persons and facilities performing work under this Agreement or acting on behalf of any of the above: (a) make any warranty or representation, express or implied, with respect to the information contained in this document; or (b) assume any liabilities with respect to the use of, or damages resulting from the use of any information contained in the document.

E. Copyrighted Material

1. USER agrees to, and does hereby grant to the Government, and to its officers, agents, servants and employees acting within the scope of their duties:

   a. A royalty-free, nonexclusive, irrevocable license to reproduce, translate, publish, use, and dispose of and to authorize others so to do, all copyrightable material first produced or composed in the performance of this Agreement by USER, its employees or any individual or concern specifically employed or assigned to originate and prepare such material; and

   b. A license as aforesaid under any and all copyrighted or copyrightable works not first produced or composed by USER in the performance of this Agreement but which are incorporated in the material furnished or delivered under the Agreement, provided that such license shall be only to the extent USER now has, or prior to completion or final settlement of the Agreement may acquire, the right to grant such license without becoming liable to pay compensation to others solely because of such grant.

2. USER agrees that it will not knowingly include any copyrightable material furnished or delivered under this Agreement without a license as provided for in subparagraph 1(b) hereof, or without the consent of the copyright owner, unless it obtains specific written approval of the Contracting Officer for the inclusion of such copyrighted materials.

F. Disclosure of Proprietary Data

In the absence of a properly executed and effective non disclosure agreement between USER and CONTRACTOR, the USER shall not bring Proprietary Data into the USER facility except at USER's own risk and any such data, regardless how it is marked, shall be deemed Technical Data and shall be treated according to this article of this Agreement.

ARTICLE X: LABORATORY SITE ACCESS, SAFETY AND HEALTH***

As a precondition to using CONTRACTOR facilities, Participants must complete all CONTRACTOR Site Access documents and requirements. USER and participant shall take all reasonable precautions in activities carried out under this Agreement to protect the safety and health of others and to protect the environment. Participants must comply with all applicable safety, health, access to information, security and environmental regulations and the requirements of the Department and CONTRACTOR, including the specific requirements of the User Facility covered by this Agreement. In the event that USER or Participant fails to comply with said regulations and requirements, CONTRACTOR may, without prejudice to any other legal or contractual rights, issue and order stopping all or any part of USER's activities at the User Facility.

Article XI: Personnel Relationships***

Participants will remain employees or representatives of the USER at all times during their participation in the work under this Agreement, and shall not be considered employees of CONTRACTOR or DOE for any purpose. Participants shall be subject to the administrative and technical supervision and control of CONTRACTOR during and in connection with the Participant's activities under this Agreement.

ARTICLE XII: EXPORT CONTROLS***

USER acknowledges that the export of goods or Technical Data may require some form of export control license from the U.S. Government and that failure to obtain such export control license may result in criminal liability under the laws of the United States.

ARTICLE XIII: PUBLICATIONS***

- **A.** USER and CONTRACTOR will provide each other copies of articles of any publication of information generated pursuant to this Agreement for review and comment 14 days prior to publication.
- ***B.*** USER will not use the name of CONTRACTOR or the United States Government or their employees in any promotional activity, such as advertisements, with reference to any product or service resulting from this Agreement, without prior written approval of the Government and CONTRACTOR.

ARTICLE XIV: DISPUTES***

The parties will attempt to jointly resolve all disputes arising under this agreement. If the parties are unable to jointly resolve a dispute within a reasonable period of time, either party may contact the laboratory's Technology Transfer Ombudsman (TTO) to provide assistance. The

TTO may work directly to resolve the dispute or, upon mutual agreement of the parties, contact a third party neutral mediator to assist the parties in coming to a resolution. The costs of the mediator's services will be shared equally by the parties. In the event that an agreement is not reached with the aid of the ombudsman or mediator, the parties may agree to have the dispute addressed by neutral evaluation. The decision rendered by the neutral evaluator shall be nonbinding on the parties, and any costs incurred there from shall be divided equally between the parties. Upon mutual agreement, the parties may request a final decision by the DOE Contracting Officer. Absent resolution, either party may seek relief in a court of competent jurisdiction.

ARTICLE XV: CONFLICT OF TERMS***

This Agreement constitutes the primary document which governs the work described in the attached Appendices. In the event of any conflict between the terms of this document and any other document issued by either Party, the terms of this document shall prevail.

ARTICLE XVI: TERMINATION***

Either Party may terminate this Agreement for any reason at any time by giving not less than thirty (30) days prior written notice to the other Party. Notice will be deemed made as of the day of receipt. The obligations of any clause of this Agreement, which by their nature extend beyond its termination, shall remain in full force and effect until fulfilled.

BATTELLE ENERGY ALLIANCE, LLC (CONTRACTOR):

BY: _____
Signature

NAME: _____
Printed

TITLE: Deputy Laboratory Director, Science & Technology

DATE: _____

User's Formal Name (USER):

BY: _____
Signature

NAME: _____
Printed

TITLE: _____

DATE: _____

ADDRESS: _____

TELEPHONE: _____

User Principal Investigator Acknowledgment

I, _____, have read and hereby acknowledge the above terms and conditions.

BY: _____
Signature

TITLE: _____

DATE: _____

ADDRESS: _____

TELEPHONE: _____

***** Any changes to the *** or substantive changes to the non *** provisions will require formal written approval by DOE.**